KARARA
MINING LTD

KARARA MINING LIMITED

Karara Iron Ore Project

Piping Technical Specification

201012-00091

1300-PI-SPC-1001

27-Jul-12

SYNOPSIS

Disclaimer

"This document has been prepared by Karara Mining Limited for exclusive use on the Karara Iron Ore Project ("the Purpose"). Use of this document other than for the Purpose is not permitted."

PROJECT 201012-00091- 1300-PI-SPC-1001 - KARARA IRON ORE PROJECT

REV	DESCRIPTION	ORIG	REVIEW	PDT APPROVAL	DATE
4	Re-issued for Use	J. Allen	B.McGregor	K.Coupar	19-Aug-10
5	Re-issued for Use	S. Lynch	A. DuPreez	K.Coupar	8-Feb-11
6	Re-issued for Use	S. Lynch	B. Frost	D. Rich	2-Sep-11
7	Re-issued for Use	B. Frost	S. Hassan	D. Rich	27-Jul-12

CONTENTS

1. INTRODUCTION 6
2. GENERAL 7
3. COMPLEMENTARY REQUIREMENTS 8
3.1 Applicable Documents 8
3.2 Statutory Regulations and Safety Standards 8
3.3 Australian Standards 8
3.4 British Standards 10
3.5 American Standards 10
3.6 Karara Iron Ore Project Standard Specifications 11
4. ABBREVIATIONS 13
4.1 Abbreviations – Specification and Standards Organisations 13
4.2 Abbreviations – General 13
5. ENVIRONMENTAL CONDITIONS 17
6. BOLTING 18
7. LINE DESIGNATION 19
7.1 Line Numbering 19
7.2 Summary of Piping System Specifications 21
7.3 Valve Identification and Numbering 23
8. MATERIAL SUPPLY REQUIREMENTS 25
8.1 Quality, Inspections and Documentation 25
9. PIPING SYSTEM DATASHEETS 26
9.1 FMP – Fire Water Main HDPE Piping System Datasheet 27
9.2 FMS – Fire Water Main Galvanized Steel Piping Datasheet 29
9.3 FSB – Fire Suppression System Black Piping Datasheet 31
9.4 FSG – Fire Suppression System Galvanized Piping Datasheet 33
9.5 HP1 – Hydraulic Power Fluid Pipework Datasheet 35
9.6 MH1 – Mining Hose Datasheet 36

9.7 PE2 – HDPE Piping System Datasheet 37
9.8 PE3 – HDPE Piping System Datasheet 40
9.9 SC1 – Carbon Steel Piping System Datasheet 43
9.10 SC2 – Carbon Steel Piping System Datasheet 50
9.11 SC3 – Carbon Steel Piping System Datasheet 52
9.12 SG1 Galvanized – Carbon Steel Piping System Datasheet 54
9.13 SR1 – Rubber Lined Carbon Steel Piping System Datasheet 57
9.14 SR2 – Rubber Lined Carbon Steel Piping System Datasheet 60
9.15 SR3 - Rubber Lined Carbon Steel Piping System Datasheet 66
9.16 SS1 – Stainless Steel Piping System Datasheet 68

10. VALVE DATASHEETS 69
10.1 AV1 – Air Release Valve Datasheet 70
10.2 BA1 – Ball Valve Datasheet 71
10.3 BA3 – Ball Valve Datasheet 73
10.4 BA4 – Ball Valve Datasheet 74
10.5 BF1 – Butterfly Valve Datasheet 75
10.6 BF2 – Butterfly Valve Datasheet 76
10.7 BF3 – Butterfly Valve Datasheet 78
10.8 CH1 – Check Valve Datasheet 79
10.9 CH2 – Check Valve Datasheet 80
10.10 CH6 – Check Valve Datasheet 81
10.11 DI1 – Diaphragm Gate Valve Datasheet 82
10.12 GA1 – Gate Valve Datasheet 83
10.13 GA2 – Gate Valve Datasheet 84
10.14 GA3 – Gate Valve Datasheet 85
10.15 GL1 – Globe Valve Datasheet 86
10.16 GL2 – Globe Valve Datasheet 87
10.17 KG1 – Knife Gate Valve Datasheet 88
10.18 KG2 – Knife Gate Valve Datasheet 90

10.19 PI2 – Pinch Valve Datasheet 92
10.20 PR1 – Pressure Relief Valve Datasheet 93
10.21 SV1 – Solenoid Diaphragm Valve Datasheet 94
10.22 SV2 – Solenoid Diaphragm Valve Datasheet 95
10.23 VA1 – Hydraulic Power Fluid Valve Datasheet 96
11. PIPE SUPPORT SPACING 97
11.1 Maximum Pipe Support Spacing for Steel Pipe 97
11.2 Pipe Support Spacing for PE1, PE2 and PE3 98
11.3 Pipe Support Spacing for SR1 and SR2 Pipe 98

1. INTRODUCTION

This Specification defines the standard piping material classes and is to be used for process and service piping system components and valves on the Karara Iron Ore Project. The purpose of the document is to ensure proper and consistent use of piping materials.

Piping material for any new fluid services are to be added as required and are subject to approval by the designated Piping Engineer responsible for the ownership of this document.

2. GENERAL

In general, design and fabrication of piping systems shall conform to the requirements of AS 4041 Pressure Piping.

Where clearly stated in this document, ASME B31.3 Process Piping and ASME B31.11 Slurry Transportation Piping Systems may be applied in situations not covered by AS 4041.

For design and fabrication of Polyethylene systems, the requirements of AS 4130 Polyethylene pipes for pressure applications, shall be met (AS 4129 for fittings).

All valves are to conform to ASME B16.34.

This document shall be read in conjunction with the Piping Design Criteria 1300-PI-BOD-1001. This document shall take precedence over the Piping Design Criteria.

Threaded pipe joints shall be BSP taper thread in accordance with AS1722.1.

Asbestos materials shall not be used in any components.All pipe, fittings and flanges shall be painted in accordance with the relevant subsection of Type A, per Technical Specification for Surface Treatment of Structural Steelwork and Pipework 1300-GE-SPC-1002.

Any deviation from this specification shall be directed to the Company Representative for approval.

3. COMPLEMENTARY REQUIREMENTS

3.1 Applicable Documents

All materials, workmanship and testing shall comply with the applicable statutory requirements of the Federal, State and Local Authorities and the latest edition of this Specification and the standards, addenda and codes as nominated in, but not limited to, the piping systems datasheets.

3.2 Statutory Regulations and Safety Standards

The Statutory Authority having jurisdiction of this plant are the;

- Department of Mines and Petroleum, Western Australia
- Department of Commerce, Western Australia
- The design and manufacture of all equipment shall comply with all relevant Government acts, Byelaws and Regulations, both State and Federal including but not limited to:
  - Mines Safety and Inspection act 1994; and
  - Mines Safety and inspection regulations 1995

3.3 Australian Standards

AS 1159 Polyethylene Pipes for Pressure Applications

AS 1167 Welding and Brazing – Filler Metals

AS 1214 Hot-dip Galvanized Coatings on Threaded Fasteners

AS 1281 Cement Mortar Lining of Steel Pipes and Fittings

AS 1345 Identification of the Contents of Piping, Conduits and Ducts

AS 1463 Polyethylene Pipe Extrusion Compounds

AS 1646 Elastomeric Seals for Waterworks Purposes

AS 1722.1 Pipe Threads of Whitworth Form, Part 1: Sealing Pipe Threads

AS 1831 Ductile Cast Iron

AS 2027	Abrasion-Resistant Cast Irons
AS 2033	Installation of Polyethylene Pipe Systems
AS 2419	Fire Hydrant Installation – System Design, Installation and Commissioning
AS 2528	Bolts, Studbolts and Nuts for Flanges and other High and Low Temperature Applications
AS 2554	Hose and Hose Assemblies for Air
AS 2700	Colour Standards for General Purposes
AS 2792	Fire Hose
AS 3673	Malleable Cast Iron Threaded Pipe Fittings
AS 3879	Solvent Cement and Priming (Cleaning) Fluids for Use with ABS Pipes and Fittings
AS 3892	Pressure Equipment - Installation
AS 3992	Pressure equipment – Welding and Brazing Qualification
AS 4037	Pressure equipment – Examination and Testing
AS 4041	Pressure Piping
AS 4058	Pre-cast Concrete Pipes (Pressure and non-Pressure)
AS 4118	Fire Sprinkler Systems
AS 4129	Fittings for Polyethylene (PE) Pipes
AS 4130	Polyethylene (PE) Pipes, Pressure Applications
AS 4131	Polyethylene (PE) Compounds for Pipes and Fittings
AS 4458	Pressure Equipment – Manufacture
AS 4680	Hot-dipped Galvanized (Zinc) Coatings on Fabricated Ferrous Articles

3.4 British Standards

BS 6374	Part 5: Lining of Equipment with Polymeric Materials for the Process Industries (Rubber Lining)
BS EN 10241	Steel Threaded Pipe Fittings
BS EN 10242	Threaded Pipe Fittings in Malleable Cast Iron

3.5 American Standards

API 570	Corrosion Rates and Inspection Intervals
API 594	Wafer and Wafer-Lug Check Valves
API 5L	Line Pipe
API 601	Metallic Gaskets for Piping
API 602	Compact Carbon Steel Gate Valves
ASME B1.13M	Metric Screw Threads: M Profile
ASME B16.1	Gray Iron Pipe Flanges and Flanged Fittings Classes 25, 125, and 250
ASME B16.10	Face-to-Face and End-to-End Dimensions of Ferrous Valves
ASME B16.11	Forged Steel Fittings, Socket-Welding and Threaded
ASME B16.20	Ring Joint Gaskets and Grooves for Steel Pipe Flanges
ASME B16.21	Non-metallic Gaskets for Pipe Flanges
ASME B16.25	Butt-welding Ends
ASME B16.28	Wrought Steel Butt Welding Short Radius Elbows and Returns
ASME B16.34	Steel Valves, Flanged and Butt-welding End
ASME B31.3	Process Piping
ASME B31.11	Slurry Transportation Piping Systems

ASME B16.36	Orifice Flanges
ASME B16.47	Large Diameter Steel Flanges
ASME B16.5	Steel Pipe Flanges and Flanged Fittings
ASME B16.9	Factory-Made Wrought Steel Butt Welding Fittings
ASME B31.11	Slurry Transportation Piping System
ASME B36.10	Welded and Seamless Wrought Steel Pipe
ASME B46.1	Surface Texture
ASTM A105	Forgings, Carbon Steel, for Piping Components
ASTM A193M	Alloy-Steel and Stainless Steel Bolting Materials for High Temperature or High Pressure Service and Other Special Purpose Applications
ASTM A194M	Carbon and Alloy Steel Nuts for Bolts for High Pressure or High Temperature Service or Both
ASTM A234M	Standard Specification for Piping Fittings of Wrought Carbon Steel and Alloy Steel for Moderate and High Temperature Service
ASTM A53	Pipe, Steel, Black and Hot Dipped, Zinc-Coated, Welded and Seamless
ASTM A536	Ductile Iron Castings
MSS-SP-44	Steel Pipeline Flanges
MSS-SP-110	Ball Valves. Threaded, Socket-Welding, Solder Joint, Grooved and Flared Ends

3.6 Karara Iron Ore Project Standard Specifications

1000-AD-FRM-1007	Plant Numbering System
1000-QA-SPC-1001	Supplier Quality Requirements Specification
1300-GE-SPC-1002	Technical Specification for Surface Treatment of Structural Steelwork and Pipework

1300-PI-BOD-1001	Piping Design Criteria
1300-PI-DRG-1022 to 1195	Piping Standard Drawings
1300-PI-SPC-1002	Fabrication and Installation of Piping, Valves and Fittings Specification
1300-PI-SPC-1004	Thermal Insulation Specification
1300-PI-SPC-1005	Hydraulic Piping Specification

4. ABBREVIATIONS

4.1 Abbreviations – Specification and Standards Organisations

API	American Petroleum Institute
AS	Australian Standard
ANSI	American National Standards Institution
ASME	American Society of Mechanical Engineers
ASNT	American Society for Non-destructive Testing
ASTM	American Society for Testing and Materials
BPVC	Boiler Pressure Vessel Code
BS	British Standard
DIN	Deutsches Institute fur Normung
EN	European Norme
HI	Hydraulic Institute
ISO	International Systems Organization
MSS	Manufacturers Standardization Society of the Valve and Fittings Industry
PFI	Pipe Fabrication Institute

4.2 Abbreviations – General

BE	Bevelled End
c/w	Complete with
CL	Class

CONC	Concentric
CR	Chrome
CS	Carbon Steel
DEG	Degree
DN	Nominal Diameter
ECC	Eccentric
EPDM	Ethylene Propylene Diene Monomer
ERW	Electric Resistance Weld
FB	Full Bore
FD	Filled
FF	Flat Face
GALV	Galvanized
Gr	Grade
GRAP	Graphite
GRVD	Grooved
Hex	Hexagonal
HDPE	High Density Polyethylene
ID	Inside Diameter
kPag	kilo Pascal's Gauge
LR	Long Radius
mm	millimetres

N/A	Not Applicable
NAB	Nickel Aluminium Bronze
NB	Nominal Bore
NDE	Non Destructive Examination
NPS	Nominal Pipe Size – Imperial Units
NPT	Pipe Thread (ASME B1.20.1)
°C	Degrees centigrade
OD	Outside Diameter
P&ID	Piping and Instrumentation Diagram
PBE	Plain Both Ends
PE	HDPE
PN	Pressure Nominal (HDPE and PP Pipe Rating)
PP	Polypropylene
RB	Reduced Bore
RED	Reducer
RF	Raised Face
RL	Rubber Lining
Sch	Schedule (ASME B36.10 M and B36.19 M)
Sch 40	ASME B36.10M – Schedule 40 Wall Thickness
Sch 80	ASME B36.10M – Schedule 80 Wall Thickness
SCRD	Screwed

SDR	Standard Dimension Ratio
SI	International System of Units
SO	Slip On
SS	Stainless Steel
Std Wt	ASME B36.10M Standard Weight Wall Thickness
STL	Steel
SW	Socket Weld
SWE	Socket Weld End
TBE	Threaded Both Ends
TD	Tapped
TE	Threaded End
w/o	Without
WD	Wound
WN	Weld Neck
XS	ASME B36.10M – Extra Strong Wall Thickness
XXS	ASME B36.10M – Extra Extra Strong Wall Thickness

5. ENVIRONMENTAL CONDITIONS

The ambient conditions are as per the Basis of Design, number 1000-GE-BOD-1001.

6. BOLTING

All bolts shall be metric. Coarse series thread pitch shall be used wherever possible. For bolts size M33 and larger, fine series pitch may be used when coarse series is not available.

For pipe flange specifications such as ASME B16.5, where metric bolt sizes are not defined, the following equivalent bolt sizes shall be used.

Inch Series Bolt Size	Equivalent Metric Series Bolt Size
1/2"	M14
5/8"	M16
3/4"	M20
7/8"	M24
1"	M27
1-1/8"	M30
1-1/4"	M33
1-3/8"	M36
1-1/2"	M39

Bolts of alternative specification may be used, where deemed by the Company Representative to be equivalent to those specified in this document.

7. LINE DESIGNATION

7.1 Line Numbering

Lines on P&IDs, piping drawings and the line list shall be identified by line numbers according to Document number 1000-AD-FRM-1007.

For each service, a different line number shall be assigned to each branch at each equipment connection.

Generally, minor lines such as trap discharges, vents and drains shall be assigned the number of the major line from which they originate.

The line number shall appear on the P&IDs, piping drawings (General Arrangement and Isometrics) and the line list.

Line numbers shall be shown on drawings adjacent to, either above or to the left of the line, and parallel with the line to which they refer. If there is insufficient space, a leader shall be used to identify the relevant line.

Example: A 150mm rubber lined carbon steel pipe not insulated with a course slurry fluid duty, will have the following designation.

Line Size		Service Code		Sequence Number		Piping System Specification		Line Insulation Type
□□□□	-	□□	-	□□□□	-	□□□	-	□□
150	-	SC	-	0206	-	SR1	-	__
Numeric		Alpha		Numeric		Alpha Numeric		Alpha

Service Code

Code	Description	Definition	Pipe Specification
AB	Air – Flotation (Blower)	Medium pressure air from dedicated blowers for the flotation plant	SG1
AE	Air – Exhaust	Ventilation & dust extraction air (not covered by this specification)	N/A

Code	Description	Definition	Pipe Specification
AI	Air – Instrument	Filtered and dry compressed air used for actuation of valves.	SG1
AP	Air – Plant	Compressed air for general plant use	SG1
AV	Air – Vent	Air vents from equipment & launders	SC1
HL	Oil – Hydraulic	High pressure hydraulic oil	HP1, SC2, SC3
OL	Oil – Lubrication	High pressure lubrication oil	HP1, SC2, SC3
RC	Reagent – Collector	Chemical collecting agent	SC1
RD	Reagent – Depressant	Chemical depressant agent	SC1
RF	Reagent – Flocculent	Chemical flocculating agent	SC1, PE3
RA	Reagent – Coagulant	Chemical coagulant agent	SC1, PE3, SS1
RR	Reagent – Frother	Chemical frothing agent	SC1
SC	Slurry – Coarse	Process Slurry containing particulates >100µm	SR1, SR2, MH1, SC1, SR3
SF	Slurry – Fine	Process Slurry with all particulate <100µm	SR1, SR2, MH1, SR3
SM	Slurry – Magnetite Concentrate	All slurry concentrate post the flotation circuit.	SR1, SR2, MH1, SR3
SR	Slurry – Froth	Slurry lines from flotation and scavenger area containing flotation agent and air	SR1, SR2, MH1
ST	Slurry – Tailings	Slurry to the tails thickener and filter press	SR1, SR2, MH1, SR3
WF	Water – Fire	Raw water reserved for fire fighting	FMP, FMS, FSB, FSG
WG	Water – Gland	Filtered raw water for gland seals	SG1, SS1
WO	Water – Potable	Treated bore water for potable use and for safety showers	PE2, PE3, SS1
WP	Water – Process	Water for general plant use, bore and reclaimed	SC1, PE3, SS1
WR	Water – Raw	Bore water	SC1, PE2, PE3

Insulation Code

Code	Description
C	Cold Conservation
H	Heat Conservation
	No Insulation
P	Insulation for Personnel Protection

7.2 Summary of Piping System Specifications

Code	Basic Material	Fluid Service
FMP	PE100 PN16	WF – Fire Water Underground Fire Water Reticulation
FMS	Carbon Steel – Galvanized	WF – Fire Water Above Ground Fire Water Reticulation
FSB	Steel – Black Pipe	WF – Fire Water Wet Pipe Fire Suppression Water
FSG	Carbon Steel – Galvanized Pipe	WF – Fire Water General above ground fire water reticulation and dry pipe fire suppression water.
HP1	Material defined by hydraulic equipment vendor schematics	HL - Hydraulic Oil OL - Lubrication Oil Hydraulic Power Fluid Pipework
MH1	Rubber Mining Hose	SF – Slurry Fine ST – Slurry Tailings SC – Slurry Coarse SM – Slurry – Magnetite Concentrate SR – Slurry – Froth
PE2	PE100 PN12.5	WR – Raw Water WO – Potable Water

Code	Basic Material	Fluid Service
PE3	PE100 PN16	WO – Potable Water WP – Process Water WR – Raw Water RF – Reagent – Flocculent RA – Reagent – Coagulant
SC1	Carbon Steel	AV - Air - Vent WP – Process Water WR – Raw Water SC – Slurry Coarse RF - Reagent – Flocculent RR – Reagent – Frother RD – Reagent – Depressant RA – Reagent – Coagulant RC – Reagent – Collector
SC2	Carbon Steel	OL – Lubrication Oil HL – Hydraulic Oil
SC3	Carbon Steel	OL – Lubrication Oil HL – Hydraulic Oil
SG1	Carbon Steel – Galvanized	AI – Instrument Air AP – Plant Air AB – Blower Air WG – Gland Water
SR1	Rubber Lined Carbon Steel	SC – Slurry Coarse SF – Slurry Fine SM – Slurry Magnetite Concentrate ST – Slurry Tailings SR – Slurry Froth

Code	Basic Material	Fluid Service
SR2	Rubber Lined Carbon Steel – Launders	SC – Slurry Coarse SF – Slurry Fine SM – Slurry Magnetite Concentrate ST – Slurry Tailings SR – Slurry Froth
SR3	Rubber Lined Carbon Steel	SC – Slurry Coarse SF – Slurry Fine SM – Slurry Magnetite Concentrate ST – Slurry Tailings
SS1	Stainless Steel	WO – Potable Water WG – Gland Water WP – Process Water RA – Reagent – Coagulant

7.3 Valve Identification and Numbering

Manual valves on P&IDs, piping drawings and the line list shall be identified by line numbers according to Document number 1000-AD-FRM-1007 and this specification.

Actuated valves and valves 80mm or larger shall be given a valve identification number and Instrument number as per document 1000-AD-FRM-1007.

Line Size		Valve Specification
□□□□	-	□□□
50	-	BF1
Numeric		Alpha Numeric

The example indicates a DN50 Wafer Butterfly valve.

Valve code descriptions are shown in the valve tables in Section 10.

The valve number and instrument number shall appear on the P&IDs, piping drawings and the line list.

8. MATERIAL SUPPLY REQUIREMENTS

All pre-fabricated spools shall be marked to indicate the pipe material class to which they have been manufactured. The form of marking shall be either hard stamping, stamped metal tag (wired to the spool) or other marking system agreed with the Company.

8.1 Quality, Inspections and Documentation

All materials shall be new and of the best quality, free from defects impairing strength, durability and appearance.

All materials shall be properly documented and identified, as required by this specification, the standards / specifications referenced here-in and in accordance with the Company approved quality control program. Project specific requirements for material certification are included in Supplier Quality Requirements Specification 1000-QA-SPC-1001. All items that lack proper identification and certification are subject to rejection. Mill certificates shall be provided where required, however for all materials supplied, the Supplier shall submit a Certificate of Compliance to the Company's Representative, stating that the materials have been manufactured, sampled, tested and inspected in accordance with the relevant material specification.

9. PIPING SYSTEM DATASHEETS

The following datasheets detail the specific requirements for each piping system class. Common abbreviations used in datasheets are listed in Section 4. The design pressure and temperature data listed in the datasheets indicates the maximum permissible for each piping class. Actual design pressure and temperature for each line shall be as shown on the line list and may be lower than the limits shown on the datasheets in this section.

It should be noted that the Branch Connection Tables are based on a single supplier's catalogue, particularly for HDPE piping. Where the nominated branch connection is not available then a request for an alternative branch arrangement may be issued to the Company Representative for approval. Branch angles other than those listed in the Branch Connection Tables may be approved by the Company Representative where required by design or layout considerations.

9.1 FMP – Fire Water Main HDPE Piping System Datasheet

PIPING SYSTEM DATASHEET	Designation **FMP** Page 1 of 2
SYSTEM CONSTRUCTION	High density polyethylene with fusion butt-welded pipe and fittings, flanged valves and specialty items. **Reserved for underground fire water reticulation piping between pumps and suppression systems.**

DESIGN DATA		SERVICES
Material	PE100, PN16, SDR 11	WF Water – Fire
Design Code	AS 4041	
Design Temperature	>0, ≤40 °C	
Design Pressure	1200 kPag	
Test Pressure	1800 kPag (9)	
AS 4041 Class	Class 2P (8)	
Corrosion Allowance	Nil	

	SIZE	DESCRIPTION	STANDARDS
PIPE (Note 2)	OD 110-450	PE100, Class PN 16, SDR11	AS4130
FITTINGS	OD 110-450	Fusion butt-welded or electro fusion welded PE100, PN16, SDR11	AS4129, AS4131
FLANGES	OD 110-450	Fusion butt-welded stub ends, PE100, PN16, with SS316 backing flange drilled to ASME B16.5 Class 150	ASTM A182, ASME B16.5, AS4130, AS4131
GASKETS	OD110-315	1.5mm, Klinger C4243, ring type	ASME B16.21
	OD 355-450	3.0mm, Klinger C4243, ring type	ASME B16.21
BOLTING	All	Metric heavy hex head bolts, SS316	ASTM A193M Gr B8M, ASME B1.13M
		Metric heavy hexagonal nuts, SS316	ASTM A194M Gr 8M, ASME B1.13M
BRANCH CONNECTIONS	All	See Piping System FMP Branch Connection Table.	

VALVES	**BALL**		**BUTTERFLY**		**CHECK**		**GATE**			
(Note 3,10)					DN100-450	CH2	DN100-450	GA3		

NOTES

1. If fabricated tees or mitred bends are used the ends shall be bevelled at 15 º to match the ID of the adjoining pipe.
2. Pipe sizes refer to outside diameter of the pipe.
3. Refer to valve datasheets for full descriptions. Valves to be used on services listed in section 10 only.
4. Deleted.
5. Thermal expansion of the pipe needs to be considered on runs longer than 10m in one direction.
6. All FMP terminations shall be flange connections at 750mm below ground level. Below ground flanges shall be wrapped in a suitable Denso tape.
7. The preference is for fusion butt welded end connections. Underground valves and flanges shall be kept to a minimum.

PIPING SYSTEM DATASHEET

Designation
FMP

NOTES

8 Requirements of AS4041 class 2P to be followed as far as applicable to HDPE piping.

9 The indicated test pressure shall apply to shop testing of shop fabricated piping and to site testing. The specified test pressure shall be achieved where possible, however the pipe manufacturer's hydro-test pressure limit based on pipe temperature during the test shall under no circumstances be exceeded.

10 Valve sizes are specified as nominal diameter (DN). These are different from pipe sizes which are specified as outside diameter (OD).

BRANCH CONNECTION TABLE

NOMINAL RUN SIZE		NOMINAL BRANCH SIZE												
		110	125	140	160	200	225	250	280	315	355	400	450	OD
		4	5	5	6	8	8	10	10	12	14	16	18	NPS
450	18	D	D	B	B	B	B	B	B	B	C	C	A	
400	16	D	B	B	B	B	B	B	B	B	C	A		
355	14	B	B	B	B	B	B	B	B	C	A			
315	12	B	B	B	B	B	B	B	C	A				
280	10	B	B	B	B	B	B	C	A					
250	10	B	B	B	B	B	C	A						
225	8	B	B	B	B	C	A							
200	8	B	B	B	B	A								
160	6	B	B	B	A									
140	5	B	B	A										
125	5	C	A											
110	4	A												
OD	NPS													

A: Equal Tee
B: Reducing Tee
C: Equal tee and Concentric Reducer
D: Reducing Tee and Concentric Reducer (Note 1)

Table Notes:

1. Use butt-welded reducing tees with mechanical joint fittings.

9.2 FMS – Fire Water Main Galvanized Steel Piping Datasheet

PIPING SYSTEM DATASHEET	Designation **FMS** Page 1 of 2
SYSTEM CONSTRUCTION	Galvanized carbon steel with grooved pipe and fittings, and grooved or flanged valves and specialty items. **Reserved for above ground fire water reticulation piping between pumps and suppression systems.**

DESIGN DATA		**SERVICES**
Material	Galv. Carbon Steel	WF Water – Fire
Design Code	AS 4041	
Design Temperature	0 – 80 °C	
Design Pressure	1,600 kPag	
Test Pressure	2,400 kPag (7)	
AS4041 Class	Class 2P	
Corrosion Allowance	1 mm	

	SIZE	DESCRIPTION	STANDARDS
PIPE	DN15-40 DN50-300	Galvanised seamless, Sch 80, SCRD BSPT Galvanized, ERW, Std Wt, (for Victaulic couplings - roll grooved ends)	ASTM A53 Gr B/API 5L Gr B, ASME B36.10
	DN350-450	Galvanized, ERW, Std Wt (for Victaulic couplings - AGS grooved ends)	
FITTINGS	DN15-40	Galvanized, forged, Class 3000, SCRD BSPT	ASTM A105, ASME B16.11
	DN50-300	Galvanized, ductile iron or steel Victaulic fittings - grooved ends	ASTM A536 Gr 65-45-12
	DN350-450	Galvanized, ductile iron or steel Victaulic fittings - AGS grooved ends	ASTM A536 Gr 65-45-12
		All bends to be LR bends, minimum 1.5D	
COUPLINGS (Note 4)	DN50-300	Galvanized, Victaulic style 07 (rigid) or style 77 (flexible) coupling	ASTM A536
	DN350-450	Galvanized, Victaulic style W07 (rigid) or style W77 (flexible) coupling,	ASTM A536
FLANGES (Note 1)	DN50-450	Galvanized, Class 150, SO, RF	ASTM A105, ASME B16.5
ORIFICE FLANGES (Note 1)	All	Galvanized, WN, Class 300, RF	ASTM A105, ASME B16.36
GASKETS	DN50-300	1.5mm, Klinger C4243, ring type	ASME B16.21
	DN350-450	3.0mm, Klinger C4243, ring type	ASME B16.21
	Victaulic	Grade 'E' gaskets (EPDM)	
BOLTING	All	Metric heavy hex head bolts, galvanized	ASTM A193M Gr B7, ASME B1.13M
		Metric heavy hexagonal nuts, galvanized	ASTM A194M Gr 2H, ASME B1.13M
	Victaulic	Track head type, galvanized	ASTM A183 or Equal
BRANCH CONNECTIONS	All	See piping system FMS branch connection table and Manufacturers catalogue	

PIPING SYSTEM DATASHEET

Designation
FMS

VALVES	BALL		BUTTERFLY		CHECK		GATE			
(Note 3)	DN15-50	BA1	DN80-300	BF2	DN50	CH1	DN50	GA1		
					DN80-450	CH2	DN80-450	GA2		

NOTES

1. Fitting to fitting welding shall be avoided. Where required WN flanges shall be used against butt weld fittings only. Welded ends bevelled to ASME B16.25 and to suit pipe schedule.
2. DN50 valves may be screwed BSP.
3. Refer to valve datasheets for full valve descriptions. Valves to be used on services listed in section 10 only.
4. For FMS piping Victaulic couplings shall be used in preference to flange connections.
5. Connections to flanged mechanical equipment shall be slip-on flange.
6. FMS may be used for connection to underground FMP terminations. All FMS used underground shall be wrapped in a suitable Denso tape.
7. Indicated test pressure shall apply to shop testing of shop fabricated piping. A lower test pressure may be applicable to site testing, where shown on the line list, in accordance with AS2419, 8.4 or 10.2.2.

BRANCH CONNECTION TABLE FOR 90° BRANCHES

NOMINAL RUN SIZE			NOMINAL BRANCH SIZE																	
				50	80	100	150	200	250	300	350	400	450							DN
				2	3	4	6	8	10	12	14	16	18							NPS
	450	18		S	S	S	B	B	B	B	B	B	A							
	400	16		S	S	S	B	B	B	B	B	A								
	350	14		S	S	S	B	B	B	B	A									
	300	12		S	B	B	B	B	B	A										
	250	10		S	S	B	B	B	A											
	200	8		B	B	B	B	A												
	150	6		B	B	B	A				A: Equal Tee B: Reducing Tee									
	100	4		B	B	A					C: Threadolet D: Weldolet									
	80	3		B	A						S: Stub-in, pipe to pipe connection									
	50	2		A																
	DN	NPS																		

NOTES

1) Branches for lines smaller than DN50 to be threadolets per MSS SP-97 or reducing Tees.

9.3 FSB – Fire Suppression System Black Piping Datasheet

PIPING SYSTEM DATASHEET	Designation FSB Page 1 of 2
SYSTEM CONSTRUCTION	Black steel with threaded, grooved and butt welded pipe and fittings; and threaded, grooved and flanged valves and specialty items. **Reserved for wet pipe fire suppression systems downstream of control valve main isolation valve.**

DESIGN DATA		SERVICES
Material	Carbon Steel	WF Water – Fire
Design Code	AS 4041	
Design Temperature	0 – 80 °C	
Design Pressure	1,200 kPag	
Test Pressure	1,600 kPag (5)	
AS 4041 Class	Class 2P	
Corrosion Allowance	1 mm	

	SIZE	DESCRIPTION	STANDARDS
PIPE	DN15-50	Seamless, Sch 80, SCRD BSPT	AS 4041, ASTM A53 Gr B/API 5L Gr B, ASME B36.10 & B16.25
	DN80-300	ERW, Std Wt, (for Victaulic couplings - roll grooved ends)	
	DN 350-450	ERW, Std Wt, (for Victaulic couplings - AGS grooved ends)	
FITTINGS	DN 15-50	Class 3000, SCRD BSPT	ASTM A105, ASME B16.11
	DN 80-450	Seamless, Std Wt, BW	ASTM A234 Gr WPB, ASME B16.9
	DN80-300	Ductile iron or steel Victaulic fittings – grooved ends	ASTM A536 Gr 65-45-12
	DN350-450	Ductile iron or steel Victaulic fittings – AGS grooved ends	
OLET FITTINGS	DN 15-50	Forged, Class 3000, SCRD BSPT	ASTM A105, MSS SP-97
	DN 80-450	Forged, Sch to suit pipe, BW	ASTM A105, MSS SP-97
COUPLINGS (Note 3)	DN 80-100	Victaulic FireLock EZ™ Rigid Coupling style 009H, UL FM Approved	ASTM A536
	DN150-300	Victaulic style 07 (rigid) or style 77 (flexible) coupling, UL FM Approved	ASTM A536
	DN350-450	Victaulic style W07 (rigid) or style W77 (flexible) coupling, UL FM Approved	ASTM A536
FLANGES (Note 1)	DN 15-50	Class 150, RF, SCRD BSPT	ASTM A105, ASME B16.5
	DN 80-450	Class 150, SO, RF	ASTM A105, ASME B16.5
GASKETS	DN 15-300	1.5mm, Klinger C4243, ring type	ASME B16.21
	DN 350-450	3.0mm, Klinger C4243, ring type	ASME B16.21
	Victaulic	Grade 'E' gaskets (EPDM)	
BOLTING	All	Metric heavy hex head bolts, galv.	ASTM A193M Gr B7, ASME B1.13M
		Metric heavy hexagonal nuts, galvanized	ASTM A194M Gr 2H, ASME B1.13M
	Victaulic	Track head type, galvanized	ASTM A183 or Equal

VALVES	BALL		BUTTERFLY		CHECK		GATE			
(Note 2)	DN15-50	BA1	DN80-300	BF2	DN15-50	CH1	DN15-50	GA1		
					DN50-450	CH2	DN50-450	GA2		

PIPING SYSTEM DATASHEET

Designation
FSB

NOTES

1. Fitting to fitting welding shall be avoided. Where required WN flanges shall be used against butt weld fittings only. Welded ends bevelled to ASME B16.25 and to suit pipe schedule.
2. Refer to valve datasheets for full valve descriptions. Valves to be used on services listed in section 10 only.
3. For FSB piping Victaulic couplings shall be used in preference to flange connections.
4. Connections to flanged mechanical equipment shall be slip-on flange.
5. Indicated test pressure shall apply to shop testing of shop fabricated piping. A lower test pressure may be applicable to site testing, where shown on the line list, in accordance with AS2118, 15.2.

BRANCH CONNECTION TABLE FOR 90° BRANCHES

NOMINAL RUN SIZE		NOMINAL BRANCH SIZE															
		50	80	100	150	200	250	300	350	400	450	500	600	650	700	750	DN
		2	3	4	6	8	10	12	14	16	18	20	24	26	28	30	NPS
750	30	S	S	S	S	S	B	B	B	B	B	B	B	B	B	A	
700	28	S	S	S	S	B	B	B	B	B	B	B	B	B	A		
650	26	S	S	S	S	B	B	B	B	B	B	B	B	A			
600	24	S	S	S	S	B	B	B	B	B	B	B	A				
500	20	S	S	S	S	B	B	B	B	B	B	A					
450	18	S	S	S	S	B	B	B	B	B	A						
400	16	S	S	S	B	B	B	B	B	A							
350	14	S	S	S	B	B	B	B	A								
300	12	S	S	B	B	B	B	A									
250	10	S	S	B	B	B	A										
200	8	S	B	B	B	A											
150	6	C	B	B	A												
100	4	B	B	A													
80	3	B	A														
50	2	A															
DN	NPS																

A: Equal Tee
B: Reducing Tee
C: Threadolet
D: Weldolet
S: Stub-in, pipe to pipe connection

9.4 FSG – Fire Suppression System Galvanized Piping Datasheet

PIPING SYSTEM DATASHEET	Designation FSG Page 1 of 2
SYSTEM CONSTRUCTION	Galvanized steel with threaded, grooved and butt welded pipe & fittings and threaded, grooved and flanged valves and specialty items. **General above ground fire water reticulation and dry pipe fire suppression systems downstream of control valve main isolation valve.**

DESIGN DATA		SERVICES
Material	Galv. Steel	WF Water – Fire
Design Code	AS 4041	
Design Temperature	0 – 80 °C	
Design Pressure	1,200 kPag	
Test Pressure	1,800 kPag (6)	
AS 4041 Class	Class 2P	
Corrosion Allowance	Galv. 300 gm/m^2	

	SIZE	DESCRIPTION	STANDARDS
PIPE	DN15-50	Galvanized, ERW, Heavy, SCRD BSPT	AS 1722.1 or ASTM A53 Gr B
	DN65-300	Galvanized, ERW, Std Wt, (for Victaulic couplings - roll grooved ends)	AS 4041, ASTM A53 Gr B/API 5L Gr B, ASME B36.10 & B16.25
(Note 1)	DN350-450	Galvanized, ERW, Std Wt, (for Victaulic couplings - AGS grooved ends)	AS 4041, ASTM A53 Gr B/API 5L Gr B, ASME B36.10 & B16.25
FITTINGS	DN15-50	Galvanized, forged, Class 3000, SCRD BSPT	ASTM A105, ASME B16.11
(Note 1 & 4)	DN65-450	Galvanized, seamless, Sch to suit pipe,BW	ASTM A234 Gr WPB, ASME B16.9
	DN65-300	Galvanized, ductile iron or steel Victaulic fittings - grooved ends	ASTM A536 Gr 65-45-12
	DN350-450	Galvanized, ductile iron or steel Victaulic fittings - AGS grooved ends	ASTM A536 Gr 65-45-12
OLET FITTINGS	DN15-50	Galvanized, forged, Class 3000, SCRD, BSPT	ASTM A105, MSS SP-97
(Notes 1)	DN65-450	Galvanized, forged, Sch to suit pipe, BW	ASTM A105, MSS SP-97
COUPLINGS	DN65-100	Galvanized, Victaulic FireLock EZ™ Rigid Coupling style 009H or similar FM approved.	ASTM A536
	DN150-300	Galvanized Victaulic style 07 (rigid) or style 77 (flexible) coupling, UL FM Approved	ASTM A536
	DN350-450	Galvanized Victaulic style W07 (rigid) or style W77 (flexible) coupling, UL/FM approved	ASTM A536
FLANGES	DN15-50	Galvanized, Class 150, RF, SCRD BSPT	ASTM A105, ASME B16.5
(Notes 2)	DN65-450	Galvanized, Class 150, SO, RF	ASTM A105, ASME B16.5
GASKETS	DN15-300	1.5mm, Klinger C4243, ring type	ASME B16.21
	DN350-450	3.0mm, Klinger C4243, ring type	ASME B16.21
	Victaulic	Grade 'E' gaskets (EPDM)	

PIPING SYSTEM DATASHEET											Designation FSG Page 2 of 2
BOLTING	All		Metric heavy hex head bolts, galvanized				ASTM A193M Gr B7, ASME B1.13M				
			Metric Heavy hexagonal nuts, galvanized				ASTM A194M Gr 2H, ASME B1.13M				
	Victaulic		Track head type, galvanized				ASTM A183 or Equal				
VALVES	BALL		BUTTERFLY		CHECK		GATE				
(Note 3)	DN15-50	BA1	DN80-300	BF2	DN50	CH1	DN15-50	GA1			
					DN50-450	CH2	DN50-450	GA2			

NOTES

1. Piping and fittings shall be fabricated from plain pipe as flanged spools and hot dipped galvanized after fabrication in accordance with AS4680.
2. Fitting to fitting welding shall be avoided. Where required WN flanges shall be used against butt weld fittings only. Welded ends bevelled to ASME B16.25 and to suit pipe schedule.
3. Refer to valve datasheets for full valve descriptions. Valves to be used on services listed in section 10 only.
4. For FSG piping Victaulic couplings shall be used in preference to flange connections.
5. Connections to flanged mechanical equipment shall be slip-on flange.
6. Indicated test pressure shall apply to shop testing of shop fabricated piping. A lower test pressure may be applicable to site testing, where shown on the line list, in accordance with AS2118, 15.2.

9.5 HP1 – Hydraulic Power Fluid Pipework Datasheet

PIPING SYSTEM DATASHEET									Designation HP1 Page 1 of 1
SYSTEM CONSTRUCTION		NOTE 1							
DESIGN DATA		SERVICES							
Material	NOTE 1, 2	OL	Lubrication oil						
Design Code		HL	Hydraulic oil						
Design Temperature									
Design Pressure									
Test Pressure									
AS 4041 Class									
Corrosion Allowance									
	SIZE	DESCRIPTION				STANDARDS			
PIPE	NOTE 1	NOTE 1				NOTE 1			
FITTINGS									
FLANGES									
GASKETS									
BOLTING									
BRANCH CONNECTIONS									
VALVES									
NOTE 1		VA1							

NOTES

1. Refer to Hydraulic Piping Specification 1300-PI-SPC-1005 and Vendor Hydraulic Schematics for all piping specification data
2. AS 4041 piping class shall be per the requirements of AS4041. For systems with design pressure >1000kPag, the minimum shall be class 2A.

9.6 MH1 – Mining Hose Datasheet

PIPING SYSTEM DATASHEET	Designation MH1 Page 1 of 1

SYSTEM CONSTRUCTION	Natural rubber lined mining hose with integral flanged ends.

DESIGN DATA		SERVICES	
Material	Rubber Mining Hose	SF	Slurry – Fine
Design Code	N/A	ST	Slurry – Tailings
Design Temperature	0 – 50 °C	SC	Slurry – Coarse
Max./Min. Design Pressure (1)	1000 kPag / F.V.	SM	Magnetite Concentrate
Test Pressure	1500 kPag (6)	SR	Slurry – Froth
AS 4041 Class	Class 3 (5)		
Corrosion Allowance	Nil		

	SIZE	DESCRIPTION	STANDARDS
HOSE (Notes 1, 2, 3, 4)	DN80-600	Linatex flexible heavy-duty materials handling hose or approved equal. Tube: 6 mm thick liner abrasion resistant natural rubber, 60 Shore A Hardness. Reinforcement: High tensile textile cords incorporating a steel wire helix. Cover: Abrasion and ozone resistant synthetic rubber.	BS 6374 Part 5
END CONNECTIONS	DN80-600	Pre-formed integral, rotating flanged ends, galvanized and drilled to Class 150	ASME B16.5 Bolt Hole Drilling
GASKETS	DN80-300	1.5mm, Klinger C4243, full face	ASME B16.21
	DN350-600	3.0mm, Klinger C4243, full face	ASME B16.21
BOLTING	All	Metric heavy hexagon head bolts, galvanized	ASTM A193M Gr B7, ASME B1.13M
		Metric heavy hexagonal nuts, galvanized	ASTM A194M Gr 2H, ASME B1.13M

VALVES	BALL		BUTTERFLY		CHECK		GATE		KNIFE GATE	

NOTES

1. The hose shall be suitable for pressure and suction service.
2. Cut hoses shall not be used unless approved by the Company Representative.
3. Hose dimensions to be as per manufacturers schedule. Hose shall be suitable for slurry with 5 mm particles travelling at 2.5 m/s maximum.
4. Where required and approved by the Company Representative, lap (swivel) joint flanges may be used.
5. Requirements of AS4041 class 3 to be followed as far as applicable to rubber hose piping.
6. Indicated test pressure shall apply to shop testing of shop fabricated piping. The requirement for shop testing may be waived, where agreed with the Company Representative. A lower test pressure may be applicable to site testing, where shown on the line list.

9.7 PE2 – HDPE Piping System Datasheet

PIPING SYSTEM DATASHEET	Designation PE2 Page 1 of 3
SYSTEM CONSTRUCTION	High density polyethylene with compression and fusion butt welded pipe and fittings, and flanged valves and specialty items.

DESIGN DATA		SERVICES	
Material	PE100, PN12.5	WR	Water – Raw
Design Code	AS 4041	WO	Water – Potable
Design Temperature	>0, ≤50°C		
Max. Design Pressure	800 kPag		
Test Pressure	1000 kPag (9)		
AS 4041 Class	Class 3 (8)		
Corrosion Allowance	Nil		

	SIZE	DESCRIPTION	STANDARDS
PIPE (Note 2)	OD 25-800	PE100, Class PN 12.5, SDR 13.6	AS4130
FITTINGS (Notes 1 & 4)	OD 25-90	Compression, PE100, PN12.5 SDR 13.6	AS4129
	OD 110-800	Fusion butt-welded or electro fusion welded PE100, PN12.5, SDR 13.6	AS4129
FLANGES	OD25-630 OD710-800	Fusion butt welded stub ends, PE100, PN12.5, with galvanized steel backing flange drilled to ASME B16.5 Class 150 / ASME B16.47 Series A	ASTM A105, ASME B16.5 ASME B16.47 Series A for diameters 710 and above
GASKETS	OD25-315	1.5mm, Klinger C4243, ring type	ASME B16.21
	OD355-800	3.0mm, Klinger C4243, ring type	ASME B16.21
BOLTING	All	Metric heavy hex head bolts, galvanized	ASTM A193M Gr B7, ASME B1.13M
		Metric heavy hexagonal nuts, galvanized	ASTM A194M Gr 2H, ASME B1.13M
BRANCH CONNECTIONS	All	See Piping System PE2 Branch Connection Table.	

VALVES	BALL		BUTTERFLY				CHECK		GATE	
(Note 3, 6)	DN20-50	BA1	DN50-300	BF1/2	DN700-800	BF3	DN20-50	CH1	DN20-50	GA1
			DN350-600	BF2			DN80-600	CH2	DN50-600	GA3

NOTES

1. If fabricated tees or mitred bends are used the ends shall be bevelled at 15 ° to match the ID of the adjoining pipe.
2. Pipe sizes refer to outside diameter of the pipe.
3. Refer to valve datasheets for full valve descriptions. Valves to be used on services listed in section 10 only.
4. Suction transition piece to have a 6° included angle x 600 mm long and discharge transition piece to have a 12° included angle x 600 mm long.
5. Above ground piping shall be supported within NEMA 20C hot dipped galvanized cable ladders fixed with cyclone proof clips. Pipes within ladders to be fixed with galvanized U-bolts or saddles at changes of direction to prevent excessive movement. Thermal expansion of the pipe needs to be considered on runs longer than 10m in one direction.
6. Valve sizes are specified as nominal diameter (DN). These are different from pipe sizes which are specified as outside diameter (OD).

PIPING SYSTEM DATASHEET

Designation
PE2

NOTES

7 All above ground piping shall be co-extruded with a 1mm outer layer of white PE and insulated in accordance with 1300-PI-SPC-1004 Thermal Insulation Specification.

8 Requirements of AS4041 class 3 to be followed as far as applicable to HDPE piping.

9 The indicated test pressure shall apply to shop testing of shop fabricated piping. A lower test pressure may be applicable to site testing, where shown on the line list. The specified test pressure shall be achieved where possible, however the pipe manufacturer's hydro-test pressure limit based on pipe temperature during the test shall under no circumstances be exceeded.

BRANCH CONNECTION TABLE

NOMINAL RUN SIZE		NOMINAL BRANCH SIZE																			
		25	32	40	50	63	75	90	110	125	140	160	200	225	250	280	315	355	400	450	OD
		¾	1	1¼	1½	2	3	3½	4	5	5	6	8	8	10	10	12	14	16	18	NPS
450	18							D	D	D	B	B	B	B	B	B	B	C	C	A	
400	16							D	D	B	B	B	B	B	B	B	B	C	A		
355	14							D	B	B	B	B	B	B	B	B	C	A			
315	12							D	B	B	B	B	B	B	B	C	A				
280	10							D	B	B	B	B	B	B	C	A					
250	10					E	E	B	B	B	B	B	B	C	A						
225	8				E	E	B	B	B	B	B	B	C	A							
200	8	E	E	E	E	B	D	B	B	B	B	B	A								
160	6	E	E	E	E	B	B	B	B	B	B	A									
140	5	E	E	E	E	B	B	B	B	B	A										
125	5	E	E	E	B	B	B	B	C	A											
110	4	E	E	E	B	B	B	C	A												
90	3½	E	E	E	E	E	B	A													
75	3	E	E	E	E	B	A														
63	2	E	B	B	B	A															
50	1½	B	B	B	A																
40	1¼	B	B	A																	
32	1	B	A																		
25	¾	A																			
OD	NPS																				

A: Equal Tee
B: Reducing Tee
C: Equal tee and Concentric Reducer
D: Reducing Tee and Concentric Reducer
E: Reducing Tee and Long Spigot Reducer (Note 1)

Table Notes:

1. For OD 90 and smaller use compression fittings. Use butt-welded reducing tees with flanged joint fittings for OD 110 and larger.
2. Tapping saddles may be used as an alternative for branches up to and including OD 50.

PIPING SYSTEM DATASHEET

Designation
PE2

BRANCH CONNECTION TABLE (continued)

NOMINAL RUN SIZE		NOMINAL BRANCH SIZE																		
		90	110	125	140	160	200	225	250	280	315	355	400	450	500	560	630	710	800	OD
		3	4	5	5	6	8	8	10	10	12	14	16	18	20	22	24	28	32	NPS
800	32	D	D	D	D	D	D	D	B	B	B	B	B	B	B	B	C	C	A	
710	28	D	D	D	D	D	D	B	B	B	B	B	B	B	B	C	C	A		
630	24	D	D	D	D	D	B	B	B	B	B	B	B	B	C	C	A			
560	22	D	D	D	D	B	B	D	B	B	B	B	B	C	C	A				
500	20	D	D	D	B	B	B	B	B	B	B	B	C	C	A					
OD	NPS																			

9.8 PE3 – HDPE Piping System Datasheet

PIPING SYSTEM DATASHEET	Designation PE3 Page 1 of 3
SYSTEM CONSTRUCTION	High density polyethylene with compression and fusion butt-welded pipe and fittings, flanged valves and specialty items. **Above and below ground services**

DESIGN DATA		SERVICES	
Material	PE100, PN16, SDR 11	WO	Water – Potable
Design Code	AS 4041	WP	Water – Process
Design Temperature	>0, ≤50 °C	WR	Water – Raw
Max. Design Pressure	1000 kPag	RF	Reagent - Flocculent
Test Pressure	1500 kPag (7)	RA	Reagent - Coagulant
AS 4041 Class	Class 3 (9)		
Corrosion Allowance	Nil		

	SIZE (OD)	DESCRIPTION	STANDARDS
PIPE (Note 2)	25-630	PE100, Class PN 16, SDR 11	AS4130
FITTINGS (Notes 1 & 4)	25-630	Fusion butt-welded or electro fusion welded, PE100, PN16, SDR11	AS4129, AS4131
FLANGES (Note 6)	25-630	Fusion butt welded main runs with fusion butt welded stub ends, PE100, PN16, with galvanized steel backing flange drilled to ASME B16.5 Class 150	ASTM A105, AS4130, ASME B16.5
GASKETS	25-315	1.5mm, Klinger C4243, ring type	ASME B16.21
	355-630	3.0mm, Klinger C4243, ring type	ASME B16.21
BOLTING	All	Metric heavy hex head bolts, galvanized	ASTM A193M Gr B7, ASME B1.13M
		Metric heavy hexagonal nuts, galvanized	ASTM A194M Gr 2H, ASME B1.13M
BRANCH CONNECTIONS	All	See Piping System PE3 Branch Connection Table.	

VALVES	BALL		BUTTERFLY		CHECK		GATE			
(Note 3,10)			DN50-600	BF1/2	DN20-50	CH1	DN20-100	GA2		
					DN80-600	CH2	DN50-600	GA3		

PIPING SYSTEM DATASHEET	Designation **PE3** Page 2 of 3

NOTES

1. If fabricated tees or mitred bends are used the ends shall be bevelled at 15° to match the ID of the adjoining pipe.
2. Pipe sizes refer to outside diameter of the pipe.
3. Refer to valve datasheets for full descriptions. Valves to be used on services listed in section 10 only.
4. Suction transition piece to have a 6 ° included angle x 600 mm long and discharge transition piece to have a 12 ° included angle x 600 mm long.
5. Above ground piping shall be supported within NEMA 20C hot dipped galvanized cable ladders fixed with cyclone proof clips. Pipes within ladders to be fixed with galvanized U-bolts or saddles at changes of direction to prevent excessive movement. Thermal expansion of the pipe needs to be considered on runs longer than 10m in one direction.
6. Flanges and valves not to be buried below ground.
7. Indicated test pressure shall apply to shop testing of shop fabricated piping. A lower test pressure may be applicable to site testing, where shown on the line list. The specified test pressure shall be achieved where possible, however the pipe manufacturer's hydro-test pressure limit based on pipe temperature during the test shall under no circumstances be exceeded.
8. All above ground piping shall be co-extruded with a 1mm outer layer of white PE and insulated in accordance with 1300-PI-SPC-1004 Thermal Insulation Specification.
9. Requirements of AS4041 class 3 to be followed as far as applicable to HDPE piping.
10. Valve sizes are specified as nominal diameter (DN). These are different from pipe sizes which are specified as outside diameter (OD).

PIPING SYSTEM DATASHEET

Designation
PE3

BRANCH CONNECTION TABLE

NOMINAL RUN SIZE		NOMINAL BRANCH SIZE																					
		25	32	40	50	63	90	110	125	140	160	200	225	250	280	315	355	400	450	500	560	630	OD
		¾	1	1¼	1½	2	3	4	5	5	6	6	8	10	10	12	14	16	18	20		24	NPS
630	24						D	D	D	D	D	B	B	B	B	B	B	B	B	C	C	A	
560							D	D	D	D	D	B	B	B	B	B	B	C	C	C	A		
500	20						D	D	D	B	B	B	B	B	B	B	B	C	C	A			
450	18						D	D	D	B	B	B	B	B	B	B	C	C	A				
400	16						D	D	B	B	B	B	B	B	B	B	C	A					
355	14						D	B	B	B	B	B	B	B	B	C	A′						
315	12						D	B	B	B	B	B	B	B	C	A							
280	10						D	B	B	B	B	B	B	C	A								
250	10					E	B	B	B	B	B	B	C	A									
225	8				E	E	B	B	B	B	B	C	A										
200	8				E	B	B	B	B	B	B	A											
160	6	E	E	E	E	B	B	B	B	B	A												
140	5	E	E	E	E	B	B	B	B	A													
125	5	E	E	E	B	B	B	B	A														
110	4	E	E	E	B	B	B	A															
90	3	C	C	C	C	B	A																
63	2	D	B	B	B	A																	
50	1½	B	B	B	A																		
40	1¼	B	B	A																			
32	1	B	A																				
25	¾	A																					
OD	NPS																						

A: Equal Tee
B: Reducing Tee
C: Equal tee and Concentric Reducer
D: Reducing Tee and Concentric Reducer
E: Reducing Tee and Long Spigot Reducer

Table Notes:

1. For OD 90 and smaller use electro fusion fittings. Use butt-welded reducing tees with flanged joint fittings for OD 110 and larger.

9.9 SC1 – Carbon Steel Piping System Datasheet

PIPING SYSTEM DATASHEET	Designation SC1 Page 1 of 4
SYSTEM CONSTRUCTION	Carbon steel with threaded and butt welded pipe and fittings, and threaded or flanged valves and specialty items OR Victaulic couplings and fittings.

DESIGN DATA		SERVICES			
Material	Carbon Steel	WP	Water – Process	RA	Reagent – Coagulant
Design Code	AS 4041	WR	Water – Raw	RC	Reagent – Collector (11)
Design Temperature	0 – 50 °C	SC	Slurry Coarse (Note 5)	AV	Air Vent
Max. Design Pressure	1,000 kPag	RF	Reagent – Flocculent		
Test Pressure	1,500 kPag (12)	RR	Reagent – Frother (11)		
AS 4041 Class	Class 3, except noted components.	RD	Reagent – Depressant		
Corrosion Allowance	1.0 mm (Note 4)				

	SIZE	DESCRIPTION	STANDARDS
PIPE	DN15-50	Seamless, Sch 80, SCRD BSPT	ASTM A53 Gr B / API 5L Gr B, ASME B 36.10
(Note 9, 11)	DN80-1200	ERW, Std Wt	ASTM A53 Gr B / API 5L Gr B ASME B36.10 & B16.25
(Note 7, 8 & 11)	DN80-450 Victaulic	ERW, Std Wt DN80-DN350 use Roll grooved ends DN350-DN450 use AGS grooved ends	ASTM A53 Gr B / API 5L Gr B ASME B36.10
FITTINGS	DN15-50	Class 3000, SCRD BSPT	ASTM A105, ASME B16.11, MSS SP-97
	DN80-1200	ERW, Std Wt	ASTM A234 Gr WPB-W, ASME B16.9, MSS SP-97
(Note 7)	DN80-450	Victaulic ductile iron or steel fittings DN80-DN350 use Roll grooved ends DN350-DN450 use AGS grooved ends	ASTM A536, Gr 65-45-12, ASTM A53 Gr.B
(Note 2)	DN550-DN1200	Mitred bend 1.5D	ASTM A53 Gr B; API 5L Gr B
FLANGES	DN15-50	Class 150, RF, SCRD BSPT	ASTM A105, ASME B16.5
	DN80-600	Slip-on Flange, Class 150, RF (13)	ASTM A105, ASME B16.5
(Notes 1)	DN650-1200	Plate Flange (ring type), FF	ASTM A36, AWWA C207 Class D or equal - drilling to ASME B16.47 class 150 - Series A
COUPLINGS	DN80-300 DN350-450	Victaulic style 07 (rigid) or style 77 (flexible) coupling Victaulic style W07 (rigid) or style W77 (flexible) coupling	ASTM A536 ASTM A536
	DN80-1200	Straub flex or open-flex type coupling with strip insert, W5 (note 15).	ASTM F1476/F1548 with EPDM sealing sleeve

PIPING SYSTEM DATASHEET

Designation
SC1

GASKETS	DN15-300	1.5mm, Klinger C4243, ring type	ASME B16.21
	DN350-600 DN650-1200	3.0mm, Klinger C4243, ring type 3.0mm EPDM rubber, ring type or equal	ASME B16.21 Design seating stress 1379-8274kPa
	Victaulic Couplings	Grade 'E' (EPDM) or 'T' (Nitrile) depending on service	
BOLTING	All	Metric heavy hex head bolts, galvanized	ASTM A193M Gr B7, ASME B1.13M
		Metric heavy hexagonal nuts, galvanized	ASTM A194M Gr 2H, ASME B1.13M
	Victaulic	Track head type, galvanized	ASTM A183 or Equal
BRANCH CONNECTIONS	All	See Piping System SC1 Branch Connection Table.	

VALVES	**BALL**		**BUTTERFLY**		**CHECK**		**GATE**		**KNIFE GATE** (17)	
(Note 3)	DN15-50	BA1	DN50-600	BF1/2	DN15-50	CH1	DN15-50	GA1	DN50-1200	KG1
			DN700-1200	BF3	DN50-600	CH2	DN50-300	GA2		
	AIR RELEASE		**GLOBE**		**DIAPHRAGM** (13)		**RELIEF**			
	DN25-50 (16)	AV1	DN 15-50	GL2	DN80-150 (Note 14)	DI1	DN25-100	PR1		

NOTES

1. WN flanges shall be used against butt weld fittings only when specifically required. Welded ends to suit pipe schedule and bevelled to ASME B16.25.
2. Mitred bends to be as per the standard details.
3. Refer to valve datasheets for full descriptions. Valves to be used on services listed in section 10 only.
4. This piping system to be classified as CLASS 3 piping as per AS4041 para. 1.4. Components can be CLASS 2A or 2P to design for pressure.
5. SC1 may also be used in slurry service when specified by the process engineer in sump pump, overflow and drain lines.
6. Connections to flanged mechanical equipment shall be slip-on flange.
7. For SC1 piping within buildings Victaulic couplings and Victaulic fittings are preferred for DN80 up to DN450.
8. SC1 piping DN 500 and above is butt welded construction jointed with field welds.
9. For SC1 piping in major pipe racks butt welded end connections and fittings are preferred.
10. Maximum shipping length is 11.8m.
11. Pipes in collector and frother service shall be limited to a maximum size of DN150 to comply with AS4041 class 3 piping size limitation for very harmful fluids.
12. Indicated test pressure shall apply to shop testing of shop fabricated piping. A lower test pressure may be applicable to site testing, where shown on the line list.
13. Where DI1 valves are used with this piping class, the mating pipe flanges shall be flat faced.
14. Diaphragm valves are rated for the full pressure capacity of this piping class only up to size ≤DN150. Valves ≥DN200 may still be used, but only in piping systems with reduced design pressure, not exceeding the valve pressure limits defined on the DI1 valve data sheet (section 10).
15. Straub couplings shall be used on pump suction lines only.
16. The AV1 valve has minimum operating temperature 4°C. This valve may be used in liquid service where the minimum operating temperature is confirmed as ≥4°C.
17. Knife gate valves are rated for the full pressure capacity of this piping class only up to size ≤DN600. Valves ≥DN650 may still be used, but only in piping systems with reduced design pressure, not exceeding the valve pressure limits defined on the KG1 valve data sheet (section 10).

18	Small bore, site run piping (DN40 and below) for water fluid codes WP and WR may be run with galvanised pipe and fittings as per SG1 specification.
19	Victaulic couplings shall not be used in pump suction lines where a Straub coupling is installed.

PIPING SYSTEM DATASHEET

Designation
SC1

BRANCH CONNECTION TABLE FOR 90° BRANCHES

NOMINAL RUN SIZE		NOMINAL BRANCH SIZE																			
		50	80	100	150	200	250	300	350	400	450	500	550	600	650	700	750	800	850	900	DN
		2	3	4	6	8	10	12	14	16	18	20	24	26	28	30	32	34	36	38	NPS
1200	48	O	O	B	B	F	F	F	F	F	F	F	F	F	F	F	F	F	F	F	
1150	46	O	O	B	B	F	F	F	F	F	F	F	F	F	F	F	F	F	F	F	
1100	44	O	O	B	B	B	B	F	F	F	F	F	F	F	F	F	F	F	F	F	
1050	42	O	O	B	B	B	B	B	B	B	F	F	F	F	F	F	F	F	F	F	
1000	40	O	O	B	B	B	B	B	B	B	B	F	F	F	F	F	F	F	F	F	
950	38	O	O	B	B	B	B	B	B	B	B	F	F	F	F	F	F	F	F	F	
900	36	O	O	B	B	B	B	B	B	B	B	B	B	B	B	B	B	B	B	B	
850	34	O	O	B	B	B	B	B	B	B	B	B	B	B	B	B	B	B	B		
800	32	O	O	B	B	B	B	B	B	B	B	B	B	B	B	B	B	B			
750	30	O	O	B	B	B	B	B	B	B	B	B	B	B	B	B	B				
700	28	O	O	B	B	B	B	B	B	B	B	B	B	B	B	B					
650	26	O	O	B	B	B	B	B	B	B	B	B	B	B	B						
600	24	O	O	B	B	B	B	B	B	B	B	B	B	B							
550	22	O	O	B	B	B	B	B	B	B	B	B	B								
500	20	O	O	B	B	B	B	B	B	B	B	B									
450	18	O	O	B	B	B	B	B	B	B	B										
400	16	O	O	B	B	B	B	B	B	B											
350	14	O	O	B	B	B	B	B	B												
300	12	O	O	B	B	B	B	T													
250	10	O	B	B	B	B	T														
200	8	O	B	B	B	T															
150	6	O	B	T	T																
100	4	O	T	T																	
80	3	T	T																		
50	2	T																			
DN	NPS																				

T Tee
B Un-reinforced Fabricated Branch (Note 2)
F Un-reinforced Fabricated Branch (Note 3)
O Weldolet

Note: All branches less than 50mm to be threadolet, tee or reducing tee

PIPING SYSTEM DATASHEET	Designation SC1 Page 4 of 4

BRANCH CONNECTION TABLE FOR 90° BRANCHES (continued)

NOMINAL RUN SIZE		NOMINAL BRANCH SIZE						
		950	1000	1050	1100	1150	1200	DN
		38	40	42	44	46	48	NPS
1200	48	F	F	F	F	F	F	
1150	46	F	F	F	F	F		
1100	44	F	F	F	F			
1050	42	F	F	F				
1000	40	F	F					
950	38	F						
DN	NPS							

Table Notes:

1) All fabricated branches with main line size > DN150 are designed as components to AS4041 CLASS 2P. Fabricated branches with main ≤ DN150 are designed to CLASS 2A to permit service with very harmful fluids. All fabricated branches are thus subject to the relevant rules regarding materials and inspection requirements. 2) Un-Reinforced Branches designated "B" to be fabricated from material as per piping specification.
3) Un-Reinforced Branches designated "F" to be fabricated from pipe of thickness equal to 12.7mm.
4) Forged Tees designated "T" can be used in place of any fabricated branch when availability or cost will dictate.

MITRE SELECTION TABLES for PIPING SPECIFICATION - SC1
3 CUT 90° MITRE BEND - PRESSURE, MATERIAL and PIPE CLASS (AS 4041)

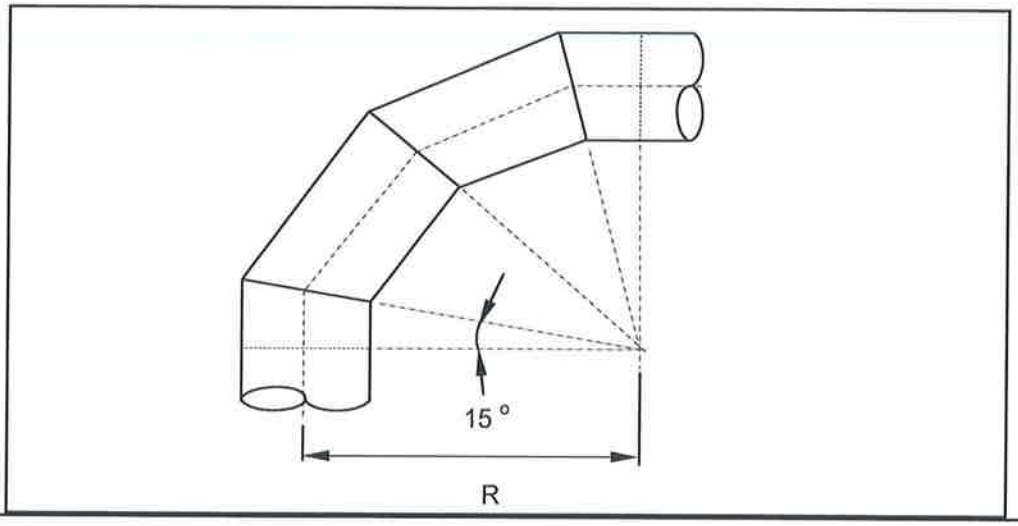

MAX. ALLOWABLE PRESSURE = 1000 kPag

DN	PRESS	WT (mm)	SCH	R	e	CLASS
550	2093	9.525	STD	838	1.00	2P
600	1872	9.525	STD	914	1.00	2P
650	1689	9.525	STD	991	1.00	2P
700	1535	9.525	STD	1067	1.00	2P
750	1404	9.525	STD	1143	1.00	2P
800	1292	9.525	STD	1219	1.00	2P
850	1194	9.525	STD	1295	1.00	2P
900	1100	9.525	STD	1372	1.00	2P
950	1033	9.525	STD	1448	1.00	2P
1000	1466	12.7	XS	1524	1.00	2P
1050	1376	12.7	XS	1600	1.00	2P
1100	1296	12.7	XS	1676	1.00	2P
1150	1223	12.7	XS	1753	1.00	2P
1200	1157	12.7	XS	1829	1.00	2P

DN = Nominal diameter
Press = Design pressure (kPag)
WT = Pipe wall thickness (mm)
e = Joint Efficiency of pipe (API 5L Gr B)
SCH = Pipe schedule (ASME B36.10)
CLASS = Pipe Design Class - AS4041 para. 1.4
G = Corrosion allowance for all mitres = 1.0 mm
R = Bend radius for mitre (mm)

MITRE SELECTION TABLES for PIPING SPECIFICATION - SC1
2 CUT 45° MITRE BEND - PRESSURE, MATERIAL and PIPE CLASS (AS 4041)

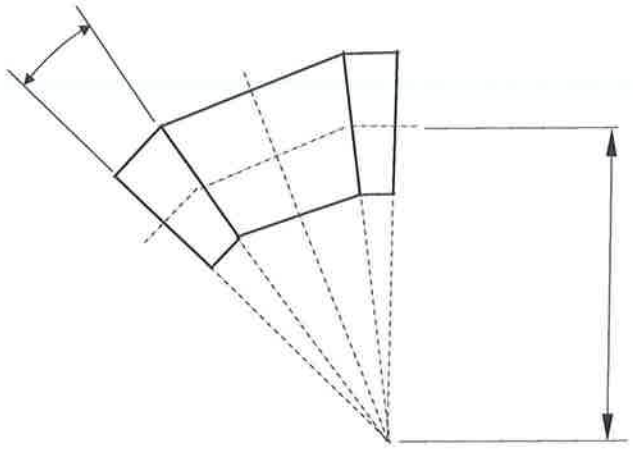

MAX. ALLOWABLE PRESSURE = 1000 kPag

DN	PRESS	WT (mm)	SCH	R	e	CLASS
600	1515	9.525	STD	914	1.00	2P
650	1371	9.525	STD	991	1.00	2P
700	1250	9.525	STD	1067	1.00	2P
750	1146	9.525	STD	1143	1.00	2P
800	1057	9.525	STD	1219	1.00	2P
850	1189	9.525	STD	1295	1.00	2P
900	1106	9.525	STD	1372	1.00	2P
950	1033	9.525	STD	1448	1.00	2P
1000	1139	9.525	XS	1524	1.00	2P
1050	1070	9.525	XS	1600	1.00	2P
1100	1009	9.525	XS	1676	1.00	2P
1150	1432	12.7	XS	1753	1.00	2P
1200	1357	12.7	XS	1829	1.00	2P

DN = Nominal diameter
Press = Design pressure (kPag)
WT = Pipe wall thickness (mm)
e = Joint Efficiency of pipe (API 5L Gr B)
SCH = Pipe schedule (ASME B36.10)
CLASS = Pipe Design Class - AS4041 para. 1.4
G = Corrosion allowance for all mitres = 1.0 mm
R = Bend radius for mitre (mm)

9.10 SC2 – Carbon Steel Piping System Datasheet

PIPING SYSTEM DATASHEET	Designation SC2 Page 1 of 2
SYSTEM CONSTRUCTION	Carbon steel with butt welded pipe and fittings, and flanged valves and specialty items.

DESIGN DATA		SERVICES	
Material	Carbon Steel	OL	Lubrication oil
Design Code	AS 4041	HL	Hydraulic oil
Design Temperature	0 – 80 °C		
Max. Design Pressure	7,500 kPag		
Test Pressure (note 5)	11,250 kPag		
AS 4041 Class	Class 2A		
Corrosion Allowance	0 mm		

	SIZE	DESCRIPTION	STANDARDS
PIPE	DN15-50	Seamless, Sch 80 / XS,	ASTM A106 Gr B, ASME B36.10
	DN80-150	Seamless, Sch XS, BE	ASTM A106 Gr B, ASME B36.10
FITTINGS	DN15-50	Seamless, Sch 80, BW	ASTM A234 WPB, ASME B16.9, ASTM A105, MSS SP-97
	DN80-150	Seamless, Sch XS, BW	ASTM A234 WPB, ASME B16.9
FLANGES (Notes 1, 2)	DN15-50	WN, Class 600 RF, XS Bore	ASTM A105, ASME B16.5
	DN80-150	WN, Class 600 RF, XS Bore	ASTM A105, ASME B16.5
GASKETS	All	Klinger Type CRIR Spiral Wound SS316 with PTFE filler, 4.5mm thick, inner & outer ring	ASME B16.20
BOLTING	All	Metric heavy hex head bolts, plain	ASTM A193M Gr B7, ASME B1.13M
		Metric heavy hexagonal nuts, plain	ASTM A194M Gr 2H, ASME B1.13M
BRANCH CONNECTIONS	All	See Piping System SC2 Branch Connection Table.	

VALVES	BALL		BUTTERFLY		CHECK		GLOBE		KNIFE GATE	
(Note 4)	DN15-100	BA3					DN15-150	GL1		

NOTES

1. Weld neck (WN) flanges ONLY to be used.
2. Welded ends to suit pipe schedule and bevelled to ASME B16.25.
3. This piping system to be designed as CLASS 2A as per AS4041 para. 1.4.
4. Refer to valve datasheets for full valve descriptions. Valves to be used on services listed in section 10 only.
5. The test pressure shown is hydrostatic and is in accordance with AS 4041.
6. SC2 may be used for other high pressure services, where specified or approved. (e.g. Chiller supply/return lines)

PIPING SYSTEM DATASHEET

Designation
SC2

NOTES

7 Piping to class SC2 shall also comply with 1300-PI-SPC-1005 Hydraulic Piping Specification.

BRANCH CONNECTION TABLE

NOMINAL RUN SIZE		NOMINAL BRANCH SIZE							
		15	20	25	40	50	80	100	150
		½	¾	1	1½	2	3	4	6
150	6	C	C	C	C	C	B	B	A
100	4	C	C	C	C	B	B	A	
80	3	C	C	B	B	B	A		
50	2	C	B	B	B	A			
40	1½	B	B	B	A				
25	1	B	B	A					
20	¾	B	A						
15	½	A							
DN	NPS								

A: Equal Tee
B: Reducing Tee
C: Weldolet

Table Notes:

1. Stub-in connections shall NOT be used for this application.

9.11 SC3 – Carbon Steel Piping System Datasheet

PIPING SYSTEM DATASHEET	Designation SC3 Page 1 of 2
SYSTEM CONSTRUCTION	Carbon steel with butt welded pipe and fittings, and flanged valves and specialty items.

DESIGN DATA		SERVICES	
Material	Carbon Steel	OL	Lubrication oil
Design Code	AS 4041	HL	Hydraulic oil
Design Temperature	0 – 80 °C		
Max. Design Pressure	1,800 kPag		
Test Pressure	2,700 kPag		
AS 4041 Class	Class 2A		
Corrosion Allowance	1 mm		

	SIZE	DESCRIPTION	STANDARDS
PIPE	DN15-50	Seamless Sch XS, BE	ASTM A106 Gr B, ASME B36.10
	DN80-200	Seamless, Std Wt, BE	ASTM A106 Gr B, ASME B36.10
FITTINGS	DN15-50	Seamless, Sch XS, BW	ASTM A234 WPB, ASME B16.9, ASTM A105, MSS SP-97
	DN80-200	Seamless, Std Wt, BW	ASTM A234 WPB, ASME B16.9
FLANGES (Notes 1, 2)	DN15-50	WN, Class 150 RF, Sch XS Bore	ASTM A105, ASME B16.5
	DN80-200	WN, Class 150, RF, Std Wt Bore	ASTM A105, ASME B16.5
GASKETS	All	Klinger Type CRIR Spiral Wound SS316 with PTFE filler, 4.5mm thk, inner & outer ring	ASME B16.20
BOLTING	All	Metric heavy hex head bolts, plain	ASTM A193M Gr B7, ASME B1.13M
		Metric heavy hexagonal nuts, plain	ASTM A194M Gr 2H, ASME B1.13M
BRANCH CONNECTIONS	All	See Piping System SC3 Branch Connection Table.	

VALVES	BALL		BUTTERFLY		CHECK		GLOBE		KNIFE GATE	
(Note 4)	DN50-200	BA4								

NOTES

1. Weld neck (WN) flanges ONLY to be used.
2. Welded ends to suit pipe schedule and bevelled to ASME B16.25.
3. This piping system to be designed as CLASS 2A as per AS4041 para. 1.4
4. Refer to valve datasheets for full valve descriptions. Valves to be used on services listed in section 10 only.
5. Piping to class SC3 shall also comply with 1300-PI-SPC-1005 Hydraulic Piping Specification.

PIPING SYSTEM DATASHEET

Designation
SC3

BRANCH CONNECTION TABLE

NOMINAL RUN SIZE		NOMINAL BRANCH SIZE									
		15	20	25	40	50	80	100	150	200	DN
		½	¾	1	1½	2	3	4	6	8	NPS
200	8	C	C	C	C	C	B	B	B	A	
150	6	C	C	C	C	C	B	B	A		
100	4	C	C	C	B	B	B	A			
80	3	C	C	B	B	B	A				
50	2	C	B	B	B	A					
40	1½	B	B	B	A						
25	1	B	B	A							
20	¾	B	A								
15	½	A									
DN	NPS										

A: Equal Tee
B: Reducing Tee
C: Weldolet

Table Notes:

1. Stub-in connections shall NOT be used for this application.

9.12 SG1 Galvanized – Carbon Steel Piping System Datasheet

PIPING SYSTEM DATASHEET	Designation SG1 Page 1 of 3
SYSTEM CONSTRUCTION	Galvanized carbon steel with screwed & butt welded pipe and fittings, and flanged valves and specialty items.

DESIGN DATA		SERVICES	
Material	GALV Carbon Steel	AI	Air – Instrument
Design Code	AS 4041	AP	Air – Plant
Design Temperature	0 – 110°C (7)	AB	Air – Blower
Max. Design Pressure	1,600 kPag	WG	Gland Water ≤90°C design (7)
Test Pressure	2,400 kPag (9)		
AS 4041 Class	Class 2A (8)		
Corrosion Allowance	0 mm		

	SIZE	DESCRIPTION	STANDARDS
PIPE (Notes 1, 2, 6)	DN15-50	Galvanized, ERW, Heavy, SCRD BSPT	ASTM A53 Gr B / API 5L Gr B, AS 1722.1
	DN80-600	ERW, Std Wt	ASTM A53 Gr B / API 5L Gr B, ASME B36.10 & B16.25
	DN50 Victaulic	Galvanized, ERW, Heavy, use roll grooved ends	AS 1074
	DN80-200 Victaulic	Galvanised, ERW, Std Wt, use roll grooved ends	ASTM A53 Gr B / API 5L Gr B, ASME B36.10
FITTINGS (Notes 1)	DN15-50	Galvanized, Class 3000, SCRD BSPT	ASTM A105, ASME B16.11, MSS SP-97
	DN80-600	ERW, Std Wt	ASTM A234 Gr WPB, ASME B16.9, MSS SP-97
FLANGES	DN15-50	Galvanized, Class 150, RF, SCRD BSPT	ASTM A105, ASME B16.5
	DN80-600	Class 150, RF (SO)	ASTM A105, ASME B16.5
COUPLINGS	DN50-200	Victaulic style 07 (rigid) or style 77 (flexible) coupling	ASTM A536
GASKETS	DN15-300 DN350-600	1.5mm, Klinger C4243, ring type 3.0mm, Klinger C4243, ring type	ASME B16.21
	Victaulic Couplings	Grade 'E' (EPDM), 'T' (Nitrile) or 'O' (fluoro-elastomer) depending on service	
BOLTING	All	Metric heavy hex head bolts, galv.	ASTM A193M Gr B7, ASME B1.13M
		Metric heavy hexagonal nuts, galvanized	ASTM A194M Gr 2H, ASME B1.13M
	Victaulic	Track head type, galvanized	ASTM A183 or Equal
BRANCH CONNECTIONS	All	See Piping System SG1 Branch Connection Table.	

VALVES (Notes 5)	BALL		BUTTERFLY		CHECK		GATE		SOLENOID	
	DN15-50	BA1	DN50-300	BF2	DN15-50	CH1	DN 15-50	GA1	DN 15-25	SV1 (10)
					DN50-200	CH2	DN 50-400	GA2	DN 15-25	SV2
	GLOBE									
	DN15-50	GL2								

PIPING SYSTEM DATASHEET	Designation **SG1** Page 2 of 3

NOTES

1 Welded ends bevelled to ASME B16.25 and to suit pipe schedule.

2 For gland water SG1 pipe to be used only up to last strainer before pump.

3 Maximum shipping length is 11.5m for flanged spools and 11.8m for non-flanged spools.

4 All fabricated spools shall be hot dipped galvanized following fabrication, in accordance with 1300-GE-SPC-1002.

5 Refer to valve datasheets for full valve descriptions. Valves to be used on services listed in section 10 only.

6 For compressed air piping systems, Victaulic connections are non-preferred. Victaulic connections may be used for compressed air pipe runs that are supported along conveyors where the conveyor curvature necessitates the use of flexible pipe couplings.

7 Maximum design temperature of 110°C is permitted for air systems only.

8 Where line list indicates a design pressure of ≤1000kPag, piping may be in accordance with AS4041 class 3 for all nominated services.

9 Indicated test pressure shall apply to shop testing of shop fabricated piping. A lower test pressure may be applicable to site testing, where shown on the line list.

10 SV1 valves are not rated for the full temperature range of this piping class. They may be used only in piping systems with reduced design temperature, not exceeding the limits defined on the SV1 valve data sheet (section 10).

PIPING SYSTEM DATASHEET

Designation
SG1

BRANCH CONNECTION TABLE for 90 DEGREE BRANCHES to 1600 kPag

NOMINAL RUN SIZE		NOMINAL BRANCH SIZE																	
		15	20	25	40	50	80	100	150	200	250	300	350	400	450	500	550	600	DN
		½	¾	1	1½	2	3	4	6	8	10	12	14	16	18	20	22	24	NPS
600	24	O	O	O	O	O	O	O	O	O	O	O	B	B	B	B	B	A	
550	22	O	O	O	O	O	O	O	O	O	O	O	B	B	B	B	A		
500	20	O	O	O	O	O	O	O	O	O	O	O	B	B	B	A			
450	18	O	O	O	O	S	S	S	O	O	O	B	B	B	A				
400	16	O	O	O	O	S	S	S	S	S	B	B	B	A					
350	14	O	O	O	O	S	S	S	S	B	B	B	A						
300	12	O	O	O	O	S	S	S	S	B	B	A							
250	10	O	O	O	O	S	S	B	B	B	A								
200	8	O	O	O	O	S	B	B	B	A									
150	6	O	O	O	O	S	B	B	A										
100	4	O	O	O	O	B	B	A											
80	3	O	O	O	B	B	A												
50	2	O	O	B	B	A													
40	1½	B	B	B	A														
25	1	B	B	A															
20	¾	B	A																
15	½	A																	
DN	NPS																		

A: Equal Tee
B: Reducing Tee or Tee with Reducer
S: Un-reinforced branch connection.
O: Branch Fitting e.g. Weldolet or Branch Fitting.

Table Notes:

1. All branches designed as components to AS4041 with 0mm corrosion allowance is subject to the rules regarding materials and inspection.
2. Piping displacement and other force loads have not been taken into account in the selection of branch connections and must be considered during final piping design.
3. The branch selection table is a minimum requirement and all branches can be substituted with an equal or reducing tee connection.

9.13 SR1 – Rubber Lined Carbon Steel Piping System Datasheet

PIPING SYSTEM DATASHEET	Designation SR1 Page 1 of 3

SYSTEM CONSTRUCTION	Natural rubber lined carbon steel with flanged pipe and fittings, and flanged valves and speciality items.

DESIGN DATA		SERVICES	
Material	Rubber Lined Carbon Steel	SC	Slurry – Coarse
Design Code	AS 4041	SF	Slurry – Fine
Design Temperature	0 – 50 °C	SM	Slurry – Magnetite Concentrate
Max. Design Pressure	1,000 kPag	ST	Slurry – Tailings
Test Pressure	1,500 kPag (13)	SR	Slurry – Froth
AS 4041 Class	Class 3 except noted components.		
Corrosion Allowance	0.00mm		

	SIZE	DESCRIPTION	STANDARDS
PIPE (Note 1)	DN50-1200	ERW, Std Wt	ASTM A53 Gr B / API 5L Gr B, ASME B36.10
FITTINGS (Note 2)	DN50-1200	Bends and Fabricated branches to be as per standard detail drawings. All slurry connections - 45 deg branches	ASTM A53 Gr B / API 5L Gr B
FLANGES (Notes 3, 4)	DN50-600	Slip-on flange, Class 150, FF	ASTM A105, ASME B16.5 Bolt Hole Drilling
	DN650-1200	Plate flange (ring type), FF	ASTM A36, AWWA C207 Class D or equal – drilling to ASME B16.47 class 150 - Series A.
COUPLINGS	DN50-1200	Straub flex or open-flex type coupling with strip insert, W5 (note 10)	ASTM F1476/F1548 with EPDM sealing sleeve
LINING (Note 3)	DN50-1200	Linatex 6 mm thick natural rubber, 40 Shore hardness. (Scale A)	BS 6374 pt 5
GASKETS	DN50-300	1.5mm, Klinger C4243, full face	ASME B16.21
	DN350-1200	3.0mm, Klinger C4243, full face	ASME B16.21
BOLTING	All	Metric heavy hex head bolts, plain	ASTM A193M Gr B7, ASME B1.13M
		Metric heavy hexagonal nuts, plain	ASTM A194M Gr 2H, ASME B1.13M
BRANCH CONNECTIONS	All	See Piping System SR1 Branch Connection Table.	

VALVES	BALL		BUTTERFLY		CHECK		DIAPHRAGM		KNIFE GATE (14)	
(Note 7)					DN100-600	CH6	DN80-100	DI1	DN50-1200	KG1

NOTES

1. Straight runs of pipe shall be fabricated in maximum 6 metre lengths – face to face but 3m, 2m and 1m spools can also be used. Minimise the number of spools where the face to face length is not as per the stated lengths above.
2. For all slurry service, use 45 degree lateral branch connections unless sacrificial flanged Tee's are used.
3. Rubber lining shall cover the full face of flanges. The flange face cover thickness shall be 3mm for all pipe sizes.
4. Flange covers shall be used at all times prior to installation to protect against UV radiation and damage.
5. Welded ends to suit pipe schedule and bevelled to ASME B16.25.

PIPING SYSTEM DATASHEET | Designation

6 Lining material to be as specified or equal approved. Lining thickness may be increased depending on application.
7 Refer to valve datasheets for full valve descriptions. Valves to be used on services listed in section 10 only.
8 Use 5D bends, for coarse slurry and 3D bends for all other slurry applications. Where space limitations exist, dead legs (T-piece) may be used.
9 Where required and approved by the company representative, lap joint flanges may be used.
10 Straub couplings shall be used on pump suction lines only. Sizing of the coupling shall account for the thickness of rubber lining on the outside of the pipe.
11 SR1 spools with field fit welds shall be delivered to site unlined.
12 SR1 may be used for higher pressure applications than that nominated above, if verified by the Piping Engineer.
13 Indicated test pressure shall apply to shop testing of shop fabricated piping. A lower test pressure may be applicable to site testing, where shown on the line list.
14 Knife gate valves are rated for the full pressure capacity of this piping class only up to size ≤DN600. Valves ≥DN650 may still be used, but only in piping systems with reduced design pressure, not exceeding the valve pressure limits defined on the KG1 valve data sheet (section 10).

BRANCH TABLES for 90 DEGREE BRANCHES to 1000 kPag

NOMINAL RUN SIZE		NOMINAL BRANCH SIZE																			
		50	80	100	150	200	250	300	350	400	450	500	550	600	650	700	750	800	850	900	DN
		2	3	4	6	8	10	12	14	16	18	20	22	24	26	28	30	32	34	36	NPS
900	36	B	B	B	B	B	B	F	F	F	F	F	F	F	F	F	F	F	F	F	
850	34	B	B	B	B	B	B	B	B	B	F	F	F	F	F	F	F	F	F		
800	32	B	B	B	B	B	B	B	B	B	B	B	B	B	B	B	B	B			
750	30	B	B	B	B	B	B	B	B	B	B	B	B	B	B	B	B				
700	28	B	B	B	B	B	B	B	B	B	B	B	B	B	B	B					
650	26	B	B	B	B	B	B	B	B	B	B	B	B	B	B						
600	24	B	B	B	B	B	B	B	B	B	B	B	B	B							
550	22	B	B	B	B	B	B	B	B	B	B	B	B								
500	20	B	B	B	B	B	B	B	B	B	B	B									
450	18	B	B	B	B	B	B	B	B	B	B										
400	16	B	B	B	B	B	B	B	B	B											
350	14	B	B	B	B	B	B	B	B												
300	12	B	B	B	B	B	B	T													
250	10	B	B	B	B	B	T														
200	8	B	B	B	B	T															
150	6	B	B	T	T																
100	4	T	T	T																	
80	3	T	T																		
50	2	T																			
DN	NPS																				

T Tee
B Un-reinforced Fabricated Branch (Note 1 & 3)
F Un-reinforced Fabricated Branch (Note 2 & 3)

Table Notes:
1) Un-Reinforced Branches designated "B" to be fabricated from material as per piping specification.
2) Un-Reinforced Branches designated "F" to be fabricated in accordance with AS4041 CLASS 2P.
3) Forged Tees designated "T" can be used in place of any fabricated branch when availability or cost will dictate.

4) Larger diameter laterals to be designed on an individual basis as required.

PIPING SYSTEM DATASHEET	Designation SR1 Page 3 of 3

BRANCH TABLES for 45° BRANCHES to 1000 kPag

NOMINAL RUN SIZE DN	NOMINAL RUN SIZE NPS	NOMINAL BRANCH SIZE DN 50	80	100	150	200	250	300	350	400	450	500	550	600
		NPS 2	3	4	6	8	10	12	14	16	18	20	22	24
600	24	B	B	F	F	F	F	F	F	F	F	F	F	
550	22	B	B	B	B	F	F	F	F	F	F			
500	20	B	B	B	B	B	B	B	B	B				
450	18	B	B	B	B	B	B	B	B					
400	16	B	B	B	B	B	B	B						
350	14	B	B	B	B	B	B							
300	12	B	B	B	B	B								
250	10	B	B	B	B	B								
200	8	B	B	B	B									
150	6	B	B	B										
100	4	B	B											
80	3	B	B											
50	2	B												
DN	NPS													

B Un-reinforced Fabricated Branch (Note 1 & 2)
F Un-reinforced Fabricated Branch (Note 2 & 3)

Table Notes:
1) Un-Reinforced Branches designated "B" to be fabricated from material as per piping specification.
2) Un-Reinforced Branches designated "F" to be fabricated in accordance with AS4041 CLASS 2P.
3) Forged laterals can be used in place of any fabricated branch when availability or cost will dictate.
4) Larger diameter laterals to be designed on an individual basis as required.

9.14 SR2 – Rubber Lined Carbon Steel Piping System Datasheet

PIPING SYSTEM DATASHEET	Designation SR2 Page 1 of 6
SYSTEM CONSTRUCTION	Natural rubber lined carbon steel flanged pipe and fittings, and flanged valves and speciality items for launders and gravity flow applications only.

DESIGN DATA		SERVICES	
Material	Rubber Lined Carbon Steel	SC	Slurry – Coarse
Design Code	AS 4041	SF	Slurry – Fine
Design Temperature	0 – 50 °C	SM	Slurry – Magnetite Concentrate.
Max. Design Pressure	200 kPag	ST	Slurry – Tailings
Test Pressure	300 kPag (12)	SR	Slurry – Froth
AS 4041 Class	Class 3 except noted components.		
Corrosion Allowance	0.00mm		

	SIZE	DESCRIPTION	STANDARDS
PIPE (Notes 1)	DN50-1200	ERW, Std Wt	ASTM A53 Gr B / API 5L Gr B, ASME B36.10
FITTINGS (Note 2)	DN50-1200	Bends and fabricated branches to be as per standard detail drawings. All slurry launder connections - 45 deg branches	ASTM A53 Gr B / API 5L Gr B
FLANGES (Notes 3, 4)	DN50-600	Slip-on flange, Class 150, FF	ASTM A105, ASME B16.5 Bolt Hole Drilling
	DN650-1200	Plate flange (ring type), FF	ASTM A36, AWWA C207 Class D or equal – drilling to ASME B16.47 class 150 - Series A.
LINING (Note 3)	DN50-1200	Linatex 6 mm thick natural rubber, 40 Shore hardness (Scale A)	BS 6374
GASKETS	DN50-300	1.5mm, Klinger C4243, full face	ASME B16.21
	DN350-1200	3.0mm, Klinger C4243, full face	ASME B16.21
BOLTING	All	Metric heavy hex head bolts, plain	ASTM A193M Gr B7, ASME B1.13M
		Metric heavy hexagonal nuts, plain	ASTM A194M Gr 2H, ASME B1.13M
BRANCH CONNECTIONS	All	See Piping System SR2 Branch Connection Table.	

VALVES	BALL		BUTTERFLY		CHECK		DIAPHRAGM		KNIFE GATE	
(Note 6)									DN80-1200	KG1

NOTES

1. Straight runs of pipe shall be fabricated in maximum 6 metre lengths.
2. For all slurry service, use 45 degree lateral branch connections unless sacrificial flanged Tee's are used.
3. Rubber lining shall cover the face of flanges. The flange face cover thickness shall be 3mm for all pipe sizes.
4. Fabricated flanges must be designed to suit.

PIPING SYSTEM DATASHEET	Designation **SR2** Page 2 of 6

5 Flange material to be a minimum as specified or equal approved.
6 Refer to valve datasheets for full valve descriptions. Valves to be used on services listed in section 10 only.
7 Flange covers shall be used at all times prior to installation to protect against UV radiation and damage.
8 Use 5D bends, for coarse slurry and 3D bends for all other slurry applications. Where space limitations exist, dead legs (T-piece) may be used.
9 Where required and approved by the company representative, lap joint flanges may be used.
10 Lining material to be as specified or equal approved.
11 SR2 spools with field fit welds shall be delivered to site unlined.
12 Indicated test pressure shall apply to shop testing of shop fabricated piping. A lower test pressure may be applicable to site testing, where shown on the line list.

PIPING SYSTEM DATASHEET

Designation
SR2

BRANCH TABLES for 90° BRANCHES to 200 kPag

NOMINAL RUN SIZE		NOMINAL BRANCH SIZE																			
		50	80	100	150	200	250	300	350	400	450	500	550	600	650	700	750	800	850	900	DN
		2	3	4	6	8	10	12	14	16	18	20	22	24	26	28	30	32	34	36	NPS
1200	48	B	B	B	B	B	B	B	B	B	B	B	B	B	B	B	B	B	B	B	
1150	46	B	B	B	B	B	B	B	B	B	B	B	B	B	B	B	B	B	B	B	
1100	44	B	B	B	B	B	B	B	B	B	B	B	B	B	B	B	B	B	B	B	
1050	42	B	B	B	B	B	B	B	B	B	B	B	B	B	B	B	B	B	B	B	
1000	40	B	B	B	B	B	B	B	B	B	B	B	B	B	B	B	B	B	B	B	
950	38	B	B	B	B	B	B	B	B	B	B	B	B	B	B	B	B	B	B	B	
900	36	B	B	B	B	B	B	B	B	B	B	B	B	B	B	B	B	B	B	B	
850	34	B	B	B	B	B	B	B	B	B	B	B	B	B	B	B	B	B	B		
800	32	B	B	B	B	B	B	B	B	B	B	B	B	B	B	B	B	B			
750	30	B	B	B	B	B	B	B	B	B	B	B	B	B	B	B	B				
700	28	B	B	B	B	B	B	B	B	B	B	B	B	B	B	B					
650	26	B	B	B	B	B	B	B	B	B	B	B	B	B	B						
600	24	B	B	B	B	B	B	B	B	B	B	B	B	B							
550	22	B	B	B	B	B	B	B	B	B	B	B	B								
500	20	B	B	B	B	B	B	B	B	B	B	B									
450	18	B	B	B	B	B	B	B	B	B	B										
400	16	B	B	B	B	B	B	B	B	B											
350	14	B	B	B	B	B	B	B	B												
300	12	B	B	B	B	B	B	B													
250	10	B	B	B	B	B	B														
200	8	B	B	B	B	B															
150	6	B	B	B	B																
100	4	B	B	B																	
80	3	B	B																		
50	2	B																			
DN	NPS																				

B Un-reinforced Fabricated Branch

PIPING SYSTEM DATASHEET

Designation
SR2

BRANCH TABLES for 90° BRANCHES to 200 kPag

NOMINAL RUN SIZE		NOMINAL BRANCH SIZE						
		950	1000	1050	1100	1150	1200	DN
		38	40	42	44	46	48	NPS
1200	48	B	B	B	B	B	B	
1150	46	B	B	B	B	B		
1100	44	B	B	B	B			
1050	42	B	B	B				
1000	40	B	B					
950	38	B						
DN	NPS							

B Un-reinforced Fabricated Branch

Table Notes:

1) All fabricated branches shall be designed and fabricated in accordance with AS4041 CLASS 3.
2) Forged Tees can be used in place of any fabricated branch when availability or cost dictates.

PIPING SYSTEM DATASHEET

Designation
SR2

BRANCH TABLES for 45° BRANCHES to 200 kPag

NOMINAL RUN SIZE		NOMINAL BRANCH SIZE																	
		80	100	150	200	250	300	350	400	450	500	550	600	650	700	750	800	850	900	DN
		3	4	6	8	10	12	14	16	18	20	22	24	26	28	30	32	34	36	NPS
1200	48	B	F	F	F	F	F	F	F	F	F	F	F	F	F	F	F	F	F	
1150	46	B	B	F	F	F	F	F	F	F	F	F	F	F	F	F	F	F	F	
1100	44	B	B	B	B	B	F	F	F	F	F	F	F	F	F	F	F	F	F	
1050	42	B	B	B	B	B	F	F	F	F	F	F	F	F	F	F	F	F	F	
1000	40	B	B	B	B	B	B	B	B	B	B	F	F	F	F	F	F	F	F	
950	38	B	B	B	B	B	B	B	B	B	B	B	B	B	B	B	B	B	B	
900	36	B	B	B	B	B	B	B	B	B	B	B	B	B	B	B	B	B	B	
850	34	B	B	B	B	B	B	B	B	B	B	B	B	B	B	B	B	B		
800	32	B	B	B	B	B	B	B	B	B	B	B	B	B	B	B	B			
750	30	B	B	B	B	B	B	B	B	B	B	B	B	B	B	B				
700	28	B	B	B	B	B	B	B	B	B	B	B	B	B	B					
650	26	B	B	B	B	B	B	B	B	B	B	B	B	B						
600	24	B	B	B	B	B	B	B	B	B	B	B	B							
550	22	B	B	B	B	B	B	B	B	B	B	B								
500	20	B	B	B	B	B	B	B	B	B	B									
450	18	B	B	B	B	B	B	B	B	B										
400	16	B	B	B	B	B	B	B	B											
350	14	B	B	B	B	B	B	B												
300	12	B	B	B	B	B	B													
250	10	B	B	B	B	B														
200	8	B	B	B	B															
150	6	B	B	B																
100	4	B	B																	
80	3	B																		
DN	NPS																			

PIPING SYSTEM DATASHEET

Designation
SR2
Page 6 of 6

BRANCH TABLES for 45° BRANCHES to 200 kPag

NOMINAL RUN SIZE		NOMINAL BRANCH SIZE						
		950	1000	1050	1100	1150	1200	DN
		38	40	42	44	46	48	NPS
1200	48	F	F	F	F	F	F	
1150	46	F	F	F	F	F		
1100	44	F	F	F	F			
1050	42	F	F	F				
1000	40	F	F					
950	38	B						
DN	NPS							

Table Notes:

1) Un-Reinforced Branches designated "B" to be fabricated in accordance with AS4041 CLASS 3 piping component.
2) Un-Reinforced Branches designated "F" to be fabricated in accordance with AS4041 CLASS 2P piping component.
3) Forged Laterals can be used in place of any fabricated branch when availability or cost will dictate.

9.15 SR3 - Rubber Lined Carbon Steel Piping System Datasheet

PIPING SYSTEM DATASHEET	Designation SR3 Page 1 of 2

SYSTEM CONSTRUCTION	Natural rubber lined carbon steel with flanged pipe and fittings, and flanged valves and speciality items.

DESIGN DATA		SERVICES	
Material	Rubber Lined Carbon Steel	SC	Slurry – Coarse
Design Code	AS 4041	SF	Slurry – Fine
Design Temperature	0 – 50 °C	SM	Slurry – Magnetite Concentrate
Max. Design Pressure	1,600 kPag	ST	Slurry – Tailings
Test Pressure	2,400 kPag (12)		
AS 4041 Class	Class 2P		
Corrosion Allowance	0.00mm		

	SIZE	DESCRIPTION	STANDARDS
PIPE (Note 1, 5)	DN50-600	ERW, Std Wt	ASTM A53 GR B / API 5L GR B, ASME B36.10
FITTINGS (Note 2)	DN50-600	Bends and Fabricated branches to be as per standard detail drawings. All slurry connections - 45 deg branches – Preferred branch type. Reducers and End Caps	ASTM A53 GR B / API 5L GR B ASTM A 53 GR B / API 5L GR B ASTM A234 WPB ASME B16.9
FLANGES (Notes 3, 4)	DN50-600	Slip-on flange, Class 150, FF	ASTM A105, ASME B16.5
LINING (Note 3)	DN50-600	Linatex 6 mm thick natural rubber, 40 Shore hardness. (Scale A)	BS 6374 pt 5
GASKETS	DN50-300	1.5mm, Klinger C4243, full face	ASME B16.21
	DN350-600	3.0mm, Klinger C4243, full face	ASME B16.21
BOLTING	All	Metric heavy hex head bolts, plain	ASTM A193M Gr B7, ASME B1.13M
		Metric heavy hexagonal nuts, plain	ASTM A194M Gr 2H, ASME B1.13M
BRANCH CONNECTIONS	All	See Piping System SR3 Branch Connection Table.	

VALVES	BALL		BUTTERFLY		CHECK		DIAPHRAGM		KNIFE GATE	
(Note 7)									DN80-600	KG2

NOTES

1. Straight runs of pipe shall be fabricated in maximum 6 metre lengths – face to face but 3m, 2m and 1m spools can also be used. Minimise the number of spools where the face to face length is not as per the stated lengths above.
2. For all slurry service, use 45 degree lateral branch connections unless sacrificial flanged Tee's are used.
3. Rubber lining shall cover the full face of flanges. The flange face cover thickness shall be 3mm for all pipe sizes.
4. Flange covers shall be used at all times prior to installation to protect against UV radiation and damage.
5. Welded ends to suit pipe schedule and bevelled to ASME B16.25.
6. Lining material to be as specified or equal approved. Lining thickness may be increased depending on application.
7. Refer to valve datasheets for full valve descriptions. Valves to be used on services listed in section 10 only.
8. Use 5D bends, for coarse slurry and 3D bends for all other slurry applications. Where space limitations exist, dead legs (T-piece) may be used.
9. Where required and approved by the company representative, lap joint flanges may be used.
11. SR3 spools with field fit welds shall be delivered to site unlined.

PIPING SYSTEM DATASHEET

Designation
SR3

NOTES

12 Indicated test pressure shall apply to shop testing of shop fabricated piping. A lower test pressure may be applicable to site testing, where shown on the line list.

BRANCH TABLES for 90° and 45° BRANCHES at 1600 kPag

NOMINAL RUN SIZE		NOMINAL BRANCH SIZE													
		50	80	100	150	200	250	300	350	400	450	500	550	600	DN
		2	3	4	6	8	10	12	14	16	18	20	22	24	NPS
600	24	B	B	B	B	F	F	F	F	F	F	F	F	F	
550	22	B	B	B	B	B	B	F	F	F	F	F	F		
500	20	B	B	B	B	B	B	B	B	B	B	F			
450	18	B	B	B	B	B	B	B	B	B	F				
400	16	B	B	B	B	B	B	B	B	F					
350	14	B	B	B	B	B	B	B	F						
300	12	B	B	B	B	B	B	F							
250	10	B	B	B	B	B	F								
200	8	B	B	B	B	F									
150	6	B	B	B	F										
100	4	B	B	B											
80	3	B	B												
50	2	B													
DN	NPS														

B Un-reinforced Fabricated Branch
F Reinforced Fabricated Branch (with reinforcing pad)

Table Notes:

1) Fabricated reinforced or un-reinforced Branches designated "F or B" to be fabricated in accordance with AS4041 CLASS 2P piping components.
2) Forged Laterals or 90 deg Olet branch fittings per MSS SP-97 to be used where required for instrument and drain connections.
3) Forged branch laterals can be used in lieu of fabricated branches when availability or cost will dictate.
4) Branches to be fabricated from material as per the piping specification.

9.16 SS1 – Stainless Steel Piping System Datasheet

PIPING SYSTEM DATASHEET	Designation SS1 Page 1 of 1

SYSTEM CONSTRUCTION	Stainless steel with flanged valves and specialty items.

DESIGN DATA		SERVICES	
Material	Stainless Steel	WO	Potable Water
Design Code	AS 4041	WG	Gland Water
Design Temperature	0 – 80 °C	WP	Water – Process
Max. Design Pressure	1,400 kPag	RA	Reagent - Coagulant
Test Pressure	2,000 kPag (5)		
AS 4041 Class	Class 2A (4)		
Corrosion Allowance	0.0 mm		

	SIZE	DESCRIPTION	STANDARDS
PIPE (Note 1)	DN15-50	Seamless, Sch 40S	ASTM A312 TP 316L
	DN80-150	Seamless, Sch 10S	ASTM A 312 TP 316L, ASME B36.19
FITTINGS	DN15-50	Seamless, Sch 40S, BW	ASTM A403 WP 316L, ASME B16.9
	DN80-150	Seamless, Sch 10S,BW	ASTM A403 WP 316L, ASME B16.9
FLANGES	DN15-50	Class 150, RF Slip-on	ASTM A182 F316L, ASME B16.5
	DN80-150	Class 150, RF Slip-on	ASTM A182 F316L, ASME B16.5
GASKETS	Flanged	1.5mm Klinger C4243, ring type	ASME B16.21
BOLTING	All	Metric heavy hex head bolts, SS316	ASTM A193M Gr B8M, ASME B1.13M
		Metric heavy hexagonal nuts, SS316	ASTM A194M Gr 8M, ASME B1.13M
BRANCH CONNECTIONS	DN15-50 DN80-150	Tee, Sch 40S Tee, Sch 10S	ASTM A403 TP316L

VALVES	BALL		BUTTERFLY		CHECK		GATE		KNIFE GATE	
(Note 3)	DN15-50	BA1			DN50-150	CH2				
					DN15-50	CH1				

NOTES

1. Equal tees or reducing tees shall be used for branches.
2. DN65 is a non-preferred size and shall only be used where necessary for making connection to equipment. Where required for threaded connection, Sch 40S shall be used. For flanged connection Sch10S shall be used.
3. Refer to valve datasheets for full valve descriptions. Valves to be used on services listed in section 10 only.
4. Where line list indicates a design pressure of ≤1000kPag, piping may be in accordance with AS4041 class 3 for all nominated services.
5. Indicated test pressure shall apply to shop testing of shop fabricated piping. A lower test pressure may be applicable to site testing, where shown on the line list.
6. All above ground piping used for Potable Water shall be insulated in accordance with 1300-PI-SPC-1004 Thermal Insulation Specification.

10. VALVE DATASHEETS

The following defines the materials and specifications for valves that shall be used for process and service piping systems for the Karara Iron Ore Project.

Valves not listed herein are to be considered as "special" and will require individual design and subsequent approval by the designated Piping Engineer.

Valve Code	SERVICE																			
	AI	AP	AB	HL	OL	SC	SF	SM	SR	ST	WF	WG	WO	WP	WR	RF	RA	RD	RR	RC
AV1														X	X					
BA1	X	X	X			X					X	X	X	X	X	X	X	X	X	X
BA3				X	X							X	X	X	X	X	X			
BA4				X	X															
BF1						X							X	X	X	X	X	X	X	X
BF2	X	X	X			X					X	X	X	X	X	X	X	X	X	X
BF3						X							X	X	X	X	X	X	X	X
CH1	X	X	X			X					X	X	X	X	X	X	X	X	X	X
CH2	X	X	X			X					X	X	X	X	X	X	X	X	X	X
CH6						X	X		X											
DI1						X	X	X	X	X				(1)						
GA1	X	X	X			X					X	X	X	X	X	X	X	X	X	X
GA2	X	X	X			X					X	X	X	X	X	X	X	X	X	X
GA3											X		X	X	X					
GL1				X	X															
GL2												X		X						
KG1						X	X	X	X	X			X	X	X	X	X	X	X	X
KG2						X	X	X		X										

Valve Code	SERVICE																			
	AI	AP	AB	HL	OL	SC	SF	SM	SR	ST	WF	WG	WO	WP	WR	RF	RA	RD	RR	RC
PI2																X		X		
PR1											X	X	X	X	X	X	X	X	X	X
SV1												X		X						
SV2												X		X						
VA1				X	X															

Notes:

1) Refer to the DI1 valve data sheet for additional information regarding the use of this valve in non-slurry service.

10.1 AV1 – Air Release Valve Datasheet

VALVE DATASHEET		Designation AV1 Page 1 of 1
DESIGN DATA (1)		**SERVICES**
Design Standard	Supplier to advise	
Design Temperature	4°C to 80°C	
Design Pressure	2500 kPag (2)	
Test Pressure	3750 kPag	
GENERAL		
Purpose		Automatic air release without allowing air entry or vacuum break
Description		Air Release Valve
Type		Internal float mechanism, with vacuum seal
Size Range		DN25 – DN50
Minimum Rating (1)		1000kPag @ 50°C
Operators		Float
End Connections		Screwed BSPT Male
Special Features		Anti-shock air discharge orifice to limit surge on valve closure.
MATERIALS		
Body / Barrel		316L stainless steel
Float		HDPE

Float Guides	316 stainless steel
End Cover & Process Connection	Mild Steel
Seats	EPDM Rubber
VENDOR INFORMATION	
Make	Vent-O-Mat or approved equal
Model No./Figure No.	Series RBXv or approved equal
NOTES	
1 Indicated "Design Data" is based on vendor information for the nominated valve model. This may exceed the minimum rating shown under "General" section, which is the minimum requirement for applications within this specification.	
2 Minimum operating pressure is 50 kPag.	

10.2 BA1 – Ball Valve Datasheet

VALVE DATASHEET		Designation BA1 Page 1 of 1
DESIGN DATA (1)		**SERVICES**
Design Standard	MSS SP-110	
Design Temperature	-45°C to 232°C	
Design Pressure	3450 kPag @ 110°C	
Test Pressure		
GENERAL		
Purpose		Isolation, On/Off
Description		Ball Valve
Type		Reduced bore, one-piece body
Size Range		DN15 – DN50
Minimum Rating (1)		1600kPag @ 110°C
Operators		DN15 – DN50 → Lever, clockwise close
End Connections		Screwed BSPT
Special Features		Lockable handle, blow-out proof stem
MATERIALS		
Body		316 stainless steel
Ball		316 stainless steel

Stem	316 stainless steel
Bonnet and Gland	
Seats	Reinforced PTFE
Body Liner	
Stem Seal	Reinforced PTFE
VENDOR INFORMATION	
Make	Gemini or Approved Equal
Model No./Figure No.	Series 76 Padlockable or equal
NOTES	
1 Indicated "Design Data" is based on vendor information for the nominated valve model. This may exceed the minimum rating shown under "General" section, which is the minimum requirement for applications within this specification.	

10.3 BA3 – Ball Valve Datasheet

VALVE DATASHEET		Designation **BA3** Page 1 of 1
DESIGN DATA [1]		**SERVICES**
Design Standard	BS EN ISO 17292, API 607, ASME B16.34, B16.10	
Design Temperature		
Design Pressure		

GENERAL	
Purpose	Isolation, On/Off
Description	Ball Valve
Type	Reduced bore, two-piece body
Size Range	DN15 – DN100
Minimum Rating [1]	7500kPag @ 80°C
Operators	Lever, clockwise close
End Connections	FLANGED, ASME B16.5, Class 600, RF
Special Features	Lockable handle, blow-out proof stem, fire safe, anti-static
MATERIALS	
Body	316 stainless steel
Ball	316 stainless steel
Stem	316 stainless steel
Bonnet and Gland	
Seats	PTFE
Stem Seal	Graphite
VENDOR INFORMATION	
Make	NEWAY or equal
Model No./Figure No.	SERIES BB Padlockable or equal

NOTES

1 Indicated "Design Data" is based on vendor information for the nominated valve model. This may exceed the minimum rating shown under "General" section, which is the minimum requirement for applications within this specification.

10.4 BA4 – Ball Valve Datasheet

VALVE DATASHEET		Designation BA4 Page 1 of 1
DESIGN DATA (1)		**SERVICES**
Design Standard	ASME B16.10, B16.34, BS5351 & API 607	
Design Temperature	0°C to 80°C	
Design Pressure	1845 kPag	
GENERAL		
Purpose		Isolation, On/Off
Description		Ball Valve
Type		Reduced bore, single piece body
Size Range		DN 50 – DN200
Minimum Rating (1)		1800kPag @ 80°C
Operators		Lever, clockwise close
End Connections		Flanged, ASME B16.5, Class 150, RF
Special Features		Lockable handle, blow-out proof stem, fire safe, anti-static
MATERIALS		
Body		Carbon Steel
Ball		316 stainless steel
Stem		316 stainless steel
Bonnet and Gland		
Seats		PTFE
Body Liner		
Stem Seal		Reinforced PTFE / Graphite
VENDOR INFORMATION		
Make		Tyco (Richards) or equal
Model No./Figure No.		Figure R711 Padlockable or equal
NOTES		
1	Indicated "Design Data" is based on vendor information for the nominated valve model. This may exceed the minimum requirement for applications within this specification minimum rating which is shown under "General" section.	

10.5 BF1 – Butterfly Valve Datasheet

VALVE DATASHEET		Designation BF1 Page 1 of 1
DESIGN DATA [2]		**SERVICES**
Design Standard	Supplier to advise	
Design Temperature	-40°C to 120°C	
Design Pressure	Inline / End of Line	
DN50-300	1600 / 1000 kPag	
DN350-600	1000 / 600 kPag	
GENERAL		
Purpose	Isolation, On/Off	
Description	Butterfly Valve	
Type	Wafer body style	
Size Range	DN50 – DN600	
Minimum Rating [2]	1000kPag @ 50°C	
Operators (Note 1)	DN50 – DN300 → Lever, clockwise close DN350 – DN600 → Gear, clockwise close	
End Connections	Wafer to suit ASME B16.5 Class 150	
Special Features	One-piece shaft, lockable operator	
MATERIALS		
Body	Ductile iron	
Disc	316 stainless steel	
Stem	316 stainless steel (≤DN300), 431 stainless steel (≥DN350)	
Bonnet and Gland		
Seats / Body Liner	EPDM	
Stem Seal		
VENDOR INFORMATION		
Make	Tyco or equal	
Model No./Figure No.	FIG F611, Padlockable or equal	

NOTES

1. Valve designation will be BF1G for valve with gear operator.
2. Indicated "Design Data" is based on vendor information for the nominated valve model. This may exceed the minimum rating shown under "General" section, which is the minimum requirement for applications within this specification.

10.6 BF2 – Butterfly Valve Datasheet

VALVE DATASHEET		Designation BF2 Page 1 of 1
DESIGN DATA (5)		**SERVICES**
Design Standard	Supplier to advise	
Design Temperature	-40°C to 120°C	
Design Pressure	Inline / End of Line	
DN50-300	1600 / 1000 kPag	
DN350-600	1000 / 600 kPag	
GENERAL		
Purpose	Isolation, On/Off	
Description	Butterfly Valve	
Type	Lugged body style	
Size Range	DN50 – DN600	
Minimum Rating (5)	1600kPag @ 110°C (≤DN300), 1000kPag @ 50°C (≥DN350)	
Operators (2)	DN50 – DN300 → Lever, clockwise close DN350 – DN600 → Gear, clockwise close	
End Connections (1)	Lugged, threaded (Metric) to suit ASME B16.5 Class 150	
Special Features	One-piece shaft, lockable operator	
MATERIALS		
Body	Ductile iron	
Disc	316 stainless steel	
Stem	316 stainless steel (≤DN300), 431 stainless steel (≥DN350)	
Seats / Body Liner	EPDM	
Stem Seal		
VENDOR INFORMATION		
Make	Tyco or equal	
Model No./Figure No.	FIG F612, Padlockable or equal	

NOTES

1. Lugged Holes to be tapped to suite ASME B16.5 Class 150 flanged bolting requirements.
2. Valve designation will be BF2G for valve with gear operator.
3. Gear operator required for valves DN50 to DN300 with stem extension.
4. BF2 valves shall be used on the standard sump pump discharge.
5. Indicated "Design Data" is based on vendor information for the nominated valve model. This may exceed the minimum rating shown under "General" section, which is the minimum requirement for applications within this specification.

6	Lugged holes have been tapped UNC for all BF2 valves purchased for the original project, due to limitations on availability of Metric tapped valves. These have been labelled with 316SS tags to highlight the deviation from the specification Metric requirement. Future purchase of BF2 valves should consider UNC tapped valves for consistency and label the valves accordingly.

10.7 BF3 – Butterfly Valve Datasheet

VALVE DATASHEET		Designation BF3 Page 1 of 1
DESIGN DATA (2)		**SERVICES**
Design Standard	BS EN 593	
Design Temperature	0°C to 70°C	
Design Pressure	1000 kPag	
GENERAL		
Purpose		Positive sealing, Isolation, On/Off
Description		Butterfly Valve
Type		Double Flanged
Size Range		DN700 – DN1200
Minimum Rating (2)		1000 kPag @ 50°C
Operators (1)		DN700 – DN1200 → Gear, clockwise close
End Connections		Flanged, AS4087 Class 10 drilled and machined to suit ASME B16.47 Series A, RF
Special Features		Lockable operator
MATERIALS		
Body		Ductile IronEN1563, EN JS 1040
Disc		Ductile Iron EN1563, EN JS 1040
Stem		Stainless Steel ASTM A276 AISI 420
Bonnet and Gland		
Seats / Body Liner		EPDM (Resilient Seating)
Stem Seal		
VENDOR INFORMATION		
Make		Tyco or Approved equal
Model No./Figure No.		F627, PN10, Padlockable

NOTES

1. Valve designation will be BF3G for valve with gear operator.
2. Indicated "Design Data" is based on vendor information for the nominated valve model. This may exceed the minimum rating shown under "General" section, which is the minimum requirement for applications within this specification.
3. Default actuator / gearbox orientation shall be 01-B1 anti-clockwise.

10.8 CH1 – Check Valve Datasheet

VALVE DATASHEET		Designation CH1 Page 1 of 1
DESIGN DATA (1)		**SERVICES**
Design Standard	Supplier to advise	
Design Temperature		
Design Pressure	5516 kPag	
GENERAL		
Purpose		Non-return
Description		Piston Check Valve
Type		Y-type Spring
Size Range		DN15 – DN50
Minimum Rating (1)		1600kPag @ 110°C
Operators		N/A
End Connections		Screwed, BSPT
Special Features		
MATERIALS		
Body		316 stainless steel
Spring		316 stainless steel
Stem		
Cap		316 stainless steel
Seats		PTFE
Body Liner		
Stem Seal		
VENDOR INFORMATION		
Make		Yueng shing Industrial or equal
Model No./Figure No.		YC 800 or equal

NOTES

1 Indicated "Design Data" is based on vendor information for the nominated valve model. This may exceed the minimum rating shown under "General" section, which is the minimum requirement for applications within this specification.

10.9 CH2 – Check Valve Datasheet

VALVE DATASHEET		Designation CH2 Page 1 of 1
DESIGN DATA (1)		**SERVICES**
Design Standard	API 594	
Design Temperature	0°C to 120°C	
Design Pressure	1690kPag @ 120°C	
GENERAL		
Purpose	Non-return	
Description	Check Valve	
Type	Single or Dual flap, one-piece body	
Size Range	DN50 – DN750	
Minimum Rating (1)	1600kPag @ 110°C	
Operators	N/A	
End Connections	Wafer to suit ASME B16.5 Class 150 and ASME B16.47 Class 150 Series A flanges	
Special Features	Non-slam type	
MATERIALS		
Body	Cast Steel	
Disc/Spring/Hinge Pin	316 stainless steel	
Stem		
Bonnet and Gland		
Seats	EPDM	
Body Liner		
Stem Seal		
VENDOR INFORMATION		
Make	Crane or Approved equal	
Model No./Figure No.	Duo-Chek II - G-15-S-A-F-4	
NOTES		
1 Indicated "Design Data" is based on vendor information for the nominated valve model. This may exceed the minimum rating shown under "General" section, which is the minimum requirement for applications within this specification.		

10.10 CH6 – Check Valve Datasheet

VALVE DATASHEET		Designation CH6 Page 1 of 1
DESIGN DATA (5)		**SERVICES**
Design Standard		
Design Temperature	0°C to 70°C	
Design Pressure	1034 kPag	
Test Pressure	1551 kPag (Note 4)	
GENERAL		
Purpose		Non-return
Description		Dual Check Valve
Type		Tech Taylor
Size Range		DN100 – DN600
Minimum Rating (5)		1000 kPag @ 50°C
Operators		N/A
End Connections		Flanged, ASME B16.5 Class 150, FF, 6mm rubber lining on flange face (uncompressed)
Special Features		6mm rubber lined
MATERIALS		
Body		Fabricated mild steel ASTM A36
Ball		Rubber
Flanges		Steel ASTM A105
VENDOR INFORMATION		
Make		Tech Taylor T2 Series or Approved equal
Model No./Figure No.		

NOTES

1. To minimise valve wear slurry velocities should be maintained in the 1.2-3 m/s range
2. Valves must be assembled with high strength metric bolts Grade 8.8 or higher
3. Ensure minimum pressure to seat ball is maintained. Refer to manufacturers literature
4. Test pressure is 1.5 x design pressure
5. Indicated "Design Data" is based on vendor information for the nominated valve model. This may exceed the minimum rating shown under "General" section, which is the minimum requirement for applications within this specification.

10.11 DI1 – Diaphragm Gate Valve Datasheet

VALVE DATASHEET		Designation DI1 Page 1 of 1
DESIGN DATA		**SERVICES**
Design Standard	EN 558 Series 7	These valves are primarily intended for use in slurry service. They may also be used in non-slurry service at isolation points where non-slurry piping connects to slurry piping (such as flushing line isolations).
Design Temperature	-10°C to 85°C	
Design Pressure (Note 1)	1000 kPag (DN80 – DN150) 600 kPag (DN200) 500 kPag (DN250) 400 kPag (DN300) 350 kPag (DN350)	
Test Pressure		
GENERAL		
Purpose	Isolation, On/Off (frequently operated)	
Description	Diaphragm Valve	
Type	DN80-100: Straight through (type KB) for slurry service DN150-350: Weir (type A) for non-slurry service	
Size Range	DN80 – DN350	
Minimum Rating (1)	1000 kPag @ 50°C	
Operators	Hand wheel (cast iron) , clockwise close	
End Connections	Flanged, ASME B16.1 Class 125, FF	
Special Features	Replaceable diaphragm and bonnet	
MATERIALS		
Body	Cast iron	
Diaphragm	Natural rubber	
Stem	Carbon steel, phosphate coated	
Liner	Hard rubber (type A), soft natural rubber (type KB)	
Stem Seal	N/A	
VENDOR INFORMATION		
Make	Saunders or Approved equal	
Model No./Figure No.	Type A & KB or Approved equal	

NOTES

1 These valves are nominated in piping material class SC1 and SR1. In sizes ≤DN150 they are rated for the full pressure capacity of SC1 and SR1 piping classes. In sizes ≥DN200 they are not. In sizes ≥DN200 these valves may only be used in piping systems with reduced design pressure, not exceeding the valve pressure limits defined on this data sheet.

10.12 GA1 – Gate Valve Datasheet

VALVE DATASHEET		Designation GA1 Page 1 of 1
DESIGN DATA (1)		**SERVICES**
Design Standard	AS1628	
Design Temperature		
Design Pressure	Class 21 (PN20)	
Test Pressure		
GENERAL		
Purpose		Isolation, On/Off
Description		Bronze Gate Valve
Type		Gate, non-rising stem, solid wedge, screwed bonnet
Size Range		DN15 – DN50
Minimum Rating (1)		1600kPag @ 110°C
Operators		Hand wheel, clockwise close
End Connections		Screwed, BSPT
Special Features		
MATERIALS		
Body / Bonnet		Bronze – AS1565 C83600M
Gate		Bronze – AS1565 C83600M
Stem		Brass – AS1567 -352
Gland		Brass – AS1567 -352
Seats		Integral
Body Liner		
Stem Seal		PTFE AS1198
VENDOR INFORMATION		
Make		Braemar or equal
Model No./Figure No.		Figure T59M or equal
NOTES		
1 Indicated "Design Data" is based on vendor information for the nominated valve model. This may exceed the minimum rating shown under "General" section, which is the minimum requirement for applications within this specification.		

10.13 GA2 – Gate Valve Datasheet

VALVE DATASHEET		Designation GA2 Page 1 of 1
DESIGN DATA (3)		**SERVICES**
Design Standard	API 600, ASME B16.10, B16.34	
Design Temperature	538°C max	
Design Pressure	1730 kPag @ 110°C	
Test Pressure	2944 kPag	
GENERAL		
Purpose	Isolation, On/Off	
Description	Gate Valve	
Type	Gate, rising stem, outside screw and yoke	
Size Range	DN50 – DN600	
Minimum Rating (3)	1600kPag @ 110°C	
Operators (1)	DN50 – DN350 → Hand wheel, clockwise close DN400 – DN600 → Gear, clockwise close	
End Connections	Flanged, ASME B16.5 Class 150, RF	
Special Features		
MATERIALS		
Body	Cast Steel ASTM A216 GR WCB	
Gate	Cast Steel ASTM A216 GR WCB with 13% Chrome Facing	
Stem and Yoke	ASTM A182 GR F6A / ASTM A216 WCB	
Bonnet and Gland	Cast Steel ASTM A216 GR WCB	
Seats	Steel ASTM A105 N Stellite Faced	
Body Liner		
Stem Packing	Graphite	
VENDOR INFORMATION		
Make	Crane or Approved equal	
Model No./Figure No.	Figure 47XU Cast Steel, OS&Y Gate Valve, Padlockable or equal	

NOTES

1. Valve designation will be GA2G for valve with gear operator.
2. This valve is not intended for below ground use.
3. Indicated "Design Data" is based on vendor information for the nominated valve model. This may exceed the minimum rating shown under "General" section, which is the minimum requirement for applications within this specification.

10.14 GA3 – Gate Valve Datasheet

VALVE DATASHEET		Designation GA3 Page 1 of 1
DESIGN DATA (2)		**SERVICES**
Design Standard	AWWA C515/C509, ASME B16.10	
Design Temperature	80°C	
Design Pressure		
Test Pressure	3447 kPag (shell) 1724 kPag (seat)	
GENERAL		
Purpose	Isolation, On/Off	
Description	Gate Valve	
Type	Sluice type, non- rising stem	
Size Range	DN50 – DN600	
Minimum Rating (2)	1200kPag @ 50°C	
Operators	Key operated, using removable spindle extension, clockwise close	
End Connections	Flanged, match ASME B16.5 Class 150, RF	
Special Features	Suitable for fire, potable, raw and process water applications.	
MATERIALS		
Body	Ductile Iron – ASTM A536	
Gate	Ductile Iron, EPDM or NBR lined	
Stem	AISI 420	
Bonnet and Gland		
Seats		
Body Liner		
Stem Seal	EPDM/NBR	
VENDOR INFORMATION		
Make	AVFI or approved equal	
Model No./Figure No.	I-RSGV-ANSI-A4703 Series or approved equal	

NOTES

1. This valve is intended for below ground installation within a valve pit.
2. Indicated "Design Data" is based on vendor information for the nominated valve model. This may exceed the minimum rating shown under "General" section, which is the minimum requirement for applications within this specification.

10.15 GL1 – Globe Valve Datasheet

VALVE DATASHEET		Designation GL1 Page 1 of 1
DESIGN DATA (1)		**SERVICES**
Design Standard	ASME B16.10, B16.34, API 602 / BS 1873	
Design Temperature		
Design Pressure	9,515 kPag @ 80°C	
Test Pressure	15,340 kPag	
GENERAL		
Purpose	Controlling	
Description	GLOBE Valve	
Type	Globe, rising stem, outside screw and yoke, bolted bonnet	
Size Range	DN15 – DN150	
Minimum Rating (1)	7500kPag @ 80°C	
Operators	DN15 – DN150 → Hand Wheel	
End Connections	Flanged, ASME B16.5 Class 600, RF	
Special Features		
MATERIALS		
Body/Bonnet	Steel to ASTM A105N or A216 WCB	
Stem	ASTM A276 TP410 / A182 GR F6a	
Disc	ASTM A276 TP410 / A105 with 13% chrome face	
Body Seat	Stellite faced	
Gland Packing	Graphite	
VENDOR INFORMATION		
Make	Crane or Approved equal	
Model No./Figure No.	3656XU (≤ DN50) & 171XU (> DN50) or Approved Equal	
NOTES		
1 Indicated "Design Data" is based on vendor information for the nominated valve model. This may exceed the minimum rating shown under "General" section, which is the minimum requirement for applications within this specification.		

10.16 GL2 – Globe Valve Datasheet

VALVE DATASHEET		Designation GL2 Page 1 of 1
DESIGN DATA (1)		**SERVICES**
Design Standard	BS5154	
Design Temperature		
Design Pressure	Class 21 (PN20)	
GENERAL		
Purpose	Controlling	
Description	GLOBE Valve	
Type	Globe, Rising Stem	
Size Range	DN15 – DN50	
Minimum Rating (1)	1600kPag @ 90°C	
Operators	Hand Wheel, clockwise close	
End Connections	Screwed, Female/Female BSPT	
Special Features	Dezincification resistant	
MATERIALS		
Body/Bonnet/Disc	Bronze – AS1565 C83600M	
Spindle	Brass AS1567-352	
Packing	PTFE	
VENDOR INFORMATION		
Make	Braemar or Approved equal	
Model No./Figure No.	Figure No.T1M or Approved Equal	
NOTES		
1 Indicated "Design Data" is based on vendor information for the nominated valve model. This may exceed the minimum rating shown under "General" section, which is the minimum requirement for applications within this specification.		

10.17 KG1 – Knife Gate Valve Datasheet

VALVE DATASHEET		Designation KG1 Page 1 of 2
DESIGN DATA [3]		
Design Standard	Supplier to advise	
Design Temperature	-50 to 71°C	
Design Pressure	1034 kPag (≤DN400) 1000 kPag (DN450-600) 517kPag (≥DN650)	
GENERAL		
Purpose	Isolation, On/Off	
Description	Knife Gate Valve	
Type	Bi-directional flow, rising stem, , full port	
Size Range	DN50 – DN1200	
Minimum Rating [3]	1000kPag @ 50°C	
Operators [2]	DN50 – DN250 → Hand wheel, clockwise close DN300 – DN400 → Gear, clockwise close DN450 – DN600 → Air Cylinder DN650 – DN1200 → Hydraulic Cylinder	
End Connections	Tapped/through-bolt DN50–400 → ASME B16.5 Class 150 (metric) Lugged DN450 – DN600 → ASME B16.5 Class 150 (Metric) Lugged DN650 – DN1200 → ASME B16.47 Class 150 Series A (Metric)	
Special Features	Replaceable wear sleeves.	
MATERIALS		
Body	Ductile Iron	
Gate	316 stainless steel (Series WS) / SAF 2205, or approved equivalent (Series WB)	
Stem	304 stainless steel	
Seats	Natural Rubber	
Stem Seal	Silicon Rubber	
VENDOR INFORMATION		
Make	Weir Minerals or Approved equal	
Model No./Figure No.	DN50-400: Series WS or approved equal DN450-600: Series WB, with non-standard 1000kPag design or approved equal DN650-1200: Series WB, with standard 517kPag design or approved equal	

VALVE DATASHEET	Designation **KG1** Page 2 of 2

NOTES

1. In the open position the gate shall be located fully external to the valve. The valve shall be closed by pushing the gate through the split between the liners, forcing each liner half to seat on one side of the gate.
2. Valve designation will be KG1A for valve with air cylinder operator, KG1G for valve with gear operator and KG1GH for valve with hydraulic cylinder operator.
3. Indicated "Design Data" is based on vendor information for the nominated valve model. This may exceed the minimum rating shown under "General" section, which is the minimum requirement for applications within this specification.
4. Where valves are not installed with actuator in the top vertical or bottom vertical position, the supplier shall be consulted regarding acceptable alternate orientations and external support requirements.
5. All actuated (instrument) valves ≥ DN350 shall be fitted with lug for attachment of cable support. This requirement does not apply to manual valves.
6. These valves have tapped holes in some sizes. Bolts used shall be as per valve supplier specification and are not necessarily in accordance with the pipe material class in which the valve is installed.
7. Load distribution rings shall be supplied, integral with the valve to permit installation between slip-on or raised face flanges.
8. These valves are nominated in piping material class SC1, SR1 and SR2. They are rated for the full design pressure of SR2 in all sizes. In sizes ≤DN600 they are rated for the design pressure of SC1 and SR1 piping classes. In sizes ≥DN650 they are not. In sizes ≥DN650 these valves may only be used in SC1 and SR1 piping systems with reduced design pressure, not exceeding the valve pressure limits defined on this data sheet.

10.18 KG2 – Knife Gate Valve Datasheet

VALVE DATASHEET		Designation KG2 Page 1 of 2
DESIGN DATA (3)		
Design Standard	Supplier to advise	
Design Temperature	-50 to 71°C	
Design Pressure	2068 kPag @ 71°C	
GENERAL		
Purpose	Isolation, On/Off	
Description	Knife Gate Valve	
Type	Bi-directional flow, rising stem, full port	
Size Range	DN80 – DN600	
Minimum Rating (3)	1600 kPag @ 50°C	
Operators (2)	DN80 – DN150 → Hand Wheel, clockwise close DN200 – DN300 → Gear, clockwise close DN350 – DN600 → Hydraulic Cylinder	
End Connections	Tapped → ASME B16.5 Class 150 (Metric)	
Special Features	Replaceable wear sleeves	
MATERIALS		
Body	Ductile Iron	
Gate	17-4pH stainless steel	
Stem	304 stainless steel	
Seats	Natural Rubber	
Stem Seal	Silicon Rubber	
VENDOR INFORMATION		
Make	Weir Minerals or Approved equal	
Model No./Figure No.	WH series or Approved equal	

VALVE DATASHEET	Designation **KG2** Page 2 of 2

NOTES

1. In the open position the gate shall be located fully external to the valve. The valve shall be closed by pushing the gate through the split between the liners, forcing each liner half to seat on one side of the gate.
2. Valve designation will be KG2G for valve with gear operator and KG2H for valve with hydraulic operator.
3. Indicated "Design Data" is based on vendor information for the nominated valve model. This may exceed the minimum rating shown under "General" section, which is the minimum requirement for applications within this specification.
4. Where valves are not installed with actuator in the top vertical or bottom vertical position, the supplier shall be consulted regarding acceptable alternate orientations and external support requirements.
5. All actuated (instrument) valves ≥ DN350 shall be fitted with lug for attachment of cable support. This requirement does not apply to manual valves.
6. These valves have tapped holes. Bolts used shall be as per valve supplier specification and are not necessarily in accordance with the pipe material class in which the valve is installed.
7. Load distribution rings shall be supplied, integral with the valve to permit installation between slip-on or raised face flanges.

10.19 PI2 – Pinch Valve Datasheet

VALVE DATASHEET		Designation PI2 Page 1 of 1
DESIGN DATA [3]		**SERVICES**
Design Standard	Supplier to advise	
Design Temperature		
GENERAL		
Purpose		Modulating control
Description		Pinch Valve
Type		Centre line closing, closing mechanism fully enclosed, full port, bi – directional
Size Range		DN50 – DN350
Minimum Rating [3]		ASME B16.5 Class 150
Operators		Automatic (Note 1)
End Connections		Flanged, FF
Special Features		Position indicator, mechanical limits on the pinch bars, positive opening tabs
MATERIALS		
Body		Ductile Iron (Note 2)
Sleeve		Natural Rubber
Pinch Mechanism		Stainless Steel
VENDOR INFORMATION		
Make		Red Valve Company or Approved Equal
Model No./Figure No.		Valve Manufacturer to Advise

NOTES

1. See datasheet for each control valve for details of the actuator
2. Vendor to advise details
3. Indicated "Design Data" is based on vendor information for the nominated valve model. This may exceed the minimum rating shown under "General" section, which is the minimum requirement for applications within this specification.

10.20 PR1 – Pressure Relief Valve Datasheet

VALVE DATASHEET		Designation PR1 Page 1 of 1
DESIGN DATA (1)		**SERVICES**
Design Standard	SAA AS1271 Or Approved Equal	
Design Temperature		
Design Pressure		
Test Pressure		
GENERAL		
Purpose		Pressure Limiting
Description		Pressure Relief Valve (PRV)
Type		Direct Spring Operated
Size Range		DN25 – DN100
Minimum Rating (1)		1000 kPag @ 50°C
Operators		Automatic
End Connections		Flanged, ASME B16.5, Class 150, RF
MATERIALS		
Body		Carbon Steel
Spring		Chrome alloy
Stem		SS 316
Bonnet		Carbon Steel
Disc		SS 316
VENDOR INFORMATION		
Make		Farris or equal
Model No./Figure No.		Series 2600 or equal
NOTES		
1 Indicated "Design Data" is based on vendor information for the nominated valve model. This may exceed the minimum rating shown under "General" section, which is the minimum requirement for applications within this specification.		

10.21 SV1 – Solenoid Diaphragm Valve Datasheet

VALVE DATASHEET		Designation SV1 Page 1 of 1
DESIGN DATA (2)		**SERVICES**
Design Standard	Supplier to advise	
Design Temperature	0°C to 80°C	
Design Pressure	1600 kPag	
Test Pressure		
GENERAL		
Purpose		Isolation, On/Off (frequently operated)
Description		Diaphragm Valve
Type		Full bore
Size Range		DN15 - DN25
Minimum Rating (2)		1600kPag @ 80°C
Operators		Solenoid (note 1)
End Connections		Screwed BSP
Special Features		
MATERIALS		
Body		Stainless Steel
Gate		N/A
Stem		N/A
Liner / Seats		NBR
Stem Seal		N/A
VENDOR INFORMATION		
Make		Burkert Approved equal
Model No./Figure No.		Type 0290 or Approved equal

NOTES

1. Refer instrument data sheet for details on solenoid actuator.
2. Indicated "Design Data" is based on vendor information for the nominated valve model. This may exceed the minimum rating shown under "General" section, which is the minimum requirement for applications within this specification.

10.22 SV2 – Solenoid Diaphragm Valve Datasheet

VALVE DATASHEET		Designation SV2 Page 1 of 1
DESIGN DATA (2)		**SERVICES**
Design Standard	Supplier to advise	
Design Temperature	-10°C to 180°C	
Design Pressure	1600 kPag	
Test Pressure		
GENERAL		
Purpose	Isolation, On/Off (frequently operated)	
Description	Angle Seat Valve	
Type	Full bore	
Size Range	DN15 - DN25	
Minimum Rating (2)	1600kPag @ 110°C	
Operators	Piston actuated (note 1)	
End Connections	Screwed BSP	
Special Features		
MATERIALS		
Body	316L Stainless Steel	
Spring	Stainless Steel	
Stem / swivel plate	Stainless Steel	
Liner / Seats	PTFE	
Stem Seal	PTFE	
VENDOR INFORMATION		
Make	Burkert Approved equal	
Model No./Figure No.	Type 2000 or Approved equal	

NOTES

1. Refer instrument data sheet for details on actuator.
2. Indicated "Design Data" is based on vendor information for the nominated valve model. This may exceed the minimum rating shown under "General" section, which is the minimum requirement for applications within this specification.

10.23 VA1 – Hydraulic Power Fluid Valve Datasheet

VALVE DATASHEET		Designation VA1 Page 1 of 1
DESIGN DATA		**SERVICES**
Design Standard	NOTE 1	
Design Temperature		
Design Pressure		
Test Pressure		
GENERAL		
Purpose		NOTE 1
Description		
Type		
Size Range		
Minimum Rating		
Operators		Clockwise close
End Connections		
Special Features		
MATERIALS		
Body		NOTE 1
Trim / Ball / Gate		
Stem		
Bonnet and Gland		
Seats		
Body Liner		
Stem Seal		
VENDOR INFORMATION		
Make		NOTE 1
Model No./Figure No.		
NOTES		
1 Refer to Hydraulic Piping Specification 1300-PI-SPC-1005 and Vendor Hydraulic Schematics for all valve specification data		

11. PIPE SUPPORT SPACING

11.1 Maximum Pipe Support Spacing for Steel Pipe

The following table is taken directly from AS4041, Table 3.28.2. The table may be used as a guide for spacing of steel pipe supports carrying air or water.

Recommended Spacing of Supports for Steel Pipe		
Nominal Size	Recommended Spacing, m	
DN	Water Service	Steam / Gas or Air Service
20	2.0	3.0
25	2.4	3.3
32	2.7	3.7
40	3.0	4.0
50	3.4	4.5
65	3.7	5.0
80	3.9	5.1
100	4.3	5.2
150	5.2	6.5
200	6.0	7.5
250	7.0	9.0
300	8.0	10.0
350	8.4	10.6
400	8.8	11.2
450	9.0	12.0
500	10.0	13.0
600	12.0	15.0

Notes:
1. Experience has shown these spacing's to be satisfactory
2. This table shows recommended maximum spacing between pipe supports for horizontal straight runs of pipe at maximum operating temperature of 400°C.
3. These spacing's do not prevail over calculated spacing's and do not apply where there are concentrated loads between supports, such as flanges, valves and couplings.

4. These spacing's are based on a fixed-beam support with a bending stress not exceeding 16 MPa and insulated pipe with the appropriate contents, and the pitch of the line being such that sag of 2.5mm between supports is incorporated in the design.

11.2 Pipe Support Spacing for PE1, PE2 and PE3

PE1, PE2 and PE3 pipes with nominal size 355mm and below shall be supported within NEMA class 20c cable tray. PE1, PE2 and PE3 pipes with nominal size 400mm and above shall be supported at 3m minimum support centres.

Cable tray width shall be based on the number of pipes and space required, but limited to a maximum width of 900mm.

11.3 Pipe Support Spacing for SR1 and SR2 Pipe

The following table defines the maximum allowable spacing for rubber lined piping.

DN	OD (mm)	WALL THK. mm (NOTE1)	Total Load KN/m	SPACING (L) m
50	60.3	3.91	0.11	3.4
65	73	5.16	0.16	3.7
80	88.9	5.49	0.23	3.9
100	114.3	6.02	0.36	4.3
150	168.3	7.11	0.73	5.2
200	219.1	8.18	1.21	6.0
250	273	9.27	1.84	7.0
300	323.8	9.52	2.51	7.8
350	355.6	9.52	2.98	8.1
400	406.4	9.52	3.80	8.4
450	457	9.52	4.72	8.7
500	508	9.52	5.75	9.0
600	610	9.52	8.10	9.5
650	660	9.52	9.40	9.6
700	711	9.52	10.83	9.8
750	762	9.52	12.35	10.0
800	813	9.52	13.98	10.2

Notes:

1. Wall thicknesses are based on Standard Weight Steel Pipe
2. Spacing = 4√ (384 x E x I x Y/5 x W)
3. The above is based on a full pipe with slurry Specific Gravity equal to 2.5.
4. The above values maintain longitudinal stress within acceptable limits, for a maximum pipe deflection of 5mm in the vertical direction under static loading,
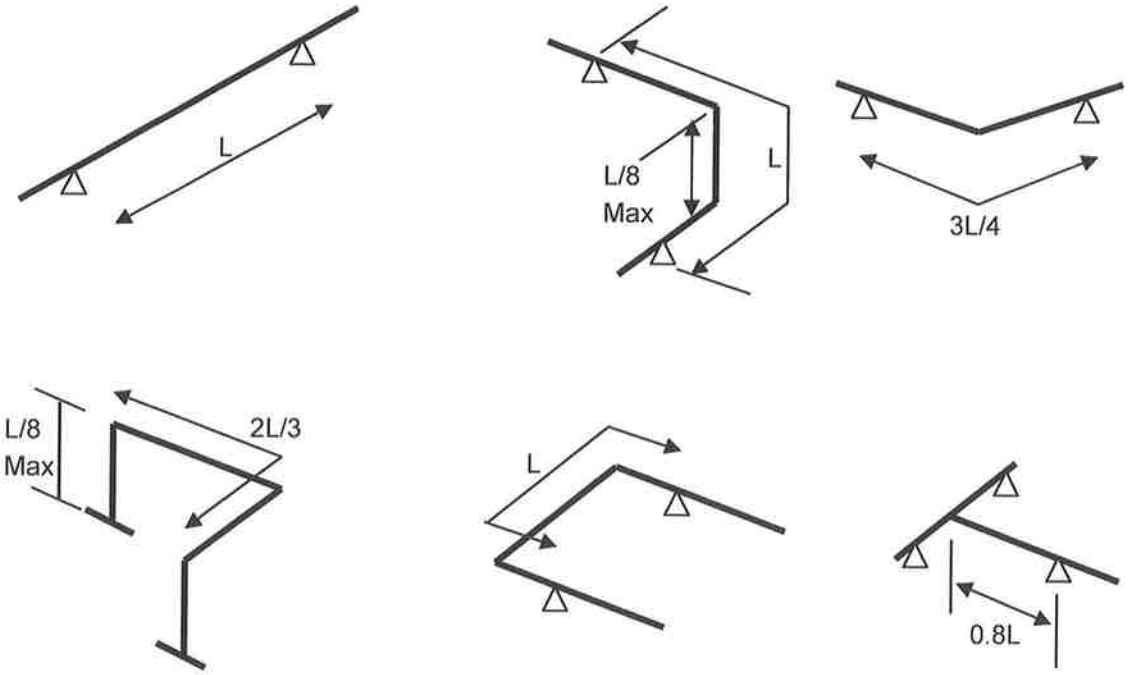
Pipe support spacing's shall be in accordance with the following: